WIRING DIAGRAM

PREVOST
LE MIRAGE 40' BUS

REFERENCE: STANDARD - MODEL 96-97-98	NO: D060871

EFF. W/ OC# N/A	PRIOR TO / OC#	DR. SERGE GROLEAU	DATE: 95-07-11
EFF. W/ VEH.# T5663	PRIOR TO / VEH.#	CK. ROCH CHAMPAGNE	APPR. ROLAND LAPOINTE

REV.	DATE	DESCRIPTION	PAGE	BY	CK.	APPR.
001	95-07-20	NEW OPTION, POWER 12V OUTLET	A, 1, 18	MH	JL	JR
002	95-08-16	NEW SPEAKER OC# 95037 EFF.W/T5681	C	MH	JL	JR
003	95-09-07	KNEELING ALARM OC# 95060 EFF.W/T5711	C, G2, H, 21	MH	JL	JR
004	95-11-09	TAG AXLE PRESS. SW. WAS N.C. CHANGED TO N.O. - OC# 95052 EFF.W/T5778	5	R.C.	JL	JR
005	95-11-16	CB18 WAS FEED FROM JCT.#58 CHANGED TO JCT.#23 EFF.W/T5763, UPDATE P.30	F, 2	S.G.	JL	JR
006	95-11-24	RAD. FAN CLUTCH ACTIVITED WITH A/C OR RETARDER OC#95078 EFF. W/T5763				
		PAGES: A, C, I, J, 1, 2, 3, 5, 9, 16, 23	← SEE	MH	JL	JR
007	95-11-28	WORLD TRANSM. HARNESS OC#95124 EFF. W/T5766	C, G2, G3, 4	MH	JL	JR
008	96-04-10	NEW SOUND SYSTEM EFF. W/T5884 OC#96007				
		PAGES: A, B, C, E1, E2, E3, F, G1, G2, G3, I, 1, 2, 28, 29, 30	← SEE	R.C.	JL	JR
009	96-04-05	NEW SPEEDO & TACHY EFF. W/T5915 OC#96014	C, 19	MH	JL	JR
010	96-06-19	WORLD TRANSM. PROGRAMMABLE SPEED SIGNAL EFF. W/V6008 OC#96109	C, G3, 4, 19	S.G.	JL	JR
011	96-10-22	NEW OPTION, DIGITAL CLOCK EFF. W/V6096 OC#96158	G1, 9	MH	JL	JR
012	97-01-20	UPDATE PAGES:	7,12,17,21,28,31	MH	JL	JR
		RESISTOR RUNNING LIGHT CONNECTOR ADDED C510 EFF. W/6160 OC#96155	C, G3,6	S.G.	JL	JR
013	97-01-20	WINDSHIELD WASHER MOTOR ADDED EFF.W/V6172 OC#96125	C, 9	MH	JL	JR
014	97-01-25	NEW A/C FAN CONDENSER & NEW FUEL TANK EFF.W/V6259 OC#95023	B,C,D,E,F,G,I, 1, 5,15	MH	JL	JR
015	97-02-25	NEW OPTION FAN CLUTCH OVERRIDE	D, G3, 9SP1, 23	S.G.	JL	JR
		WIRELESS MICRO RECEIVER ADDED	A, 28, 33	S.G.	JL	JR
016	97-04-01	ESPAR TIMER EFF.W/V6253 OC#97022	C, G3, 17	MH	JL	JR
017	97-10-23	NEW VOLTAGE REGULATOR EFF.W/W8435 OC#97104	1	S.G.	JL	JR
018	98-01-20	NEW TRANSMISSION AND ABS EFF.W/W6503 OC#97140	C,D,F,G,I,3,4,14,19,23,24	S.G.	J.R.	JR
019	98-02-05	NEW WEBASTO TIMER EFF.W/W6503 OC#97154	C, 17	MH	J.R.	JR
020	98-02-12	NEW HARNESS ARRANG, SOUND SYS. & BACK-UP P.A. REMOVED EFF.W/W6576 OC#97056	G3, 28, 29, 33	MH	J.R.	JR
021	98-04-08	UPDATE MIRROR RAMCO	18	S.G.	J.R.	JR

REV.	DATE	DESCRIPTION	PAGE	BY	CK.	APPR.
022	98-08-12	ABS DIFFERENTIEL SENSOR EFF.W/X6691 OC#98075	C, G2/3	S.G.	J.R.	JL
		UPDATE	H,I,1,2,9,15,20,21,24	S.G.	J.R.	JL
023	98-08-17	WIRE #90G MOVED BEFORE R29 RELAY O.C. 98088 EFF. W/W-6681	15	J.R.	J.R.	JL
024	98-10	RESISTOR ADDED IN SERIAL WITH COIL OF CONDENSER RELAY OC#98112 EEF :X6809	J,15	J.R.	J.R.	JL
025	98-11	THERMOSTAT BYPASSED ON A/C AUXILIARY UNIT OC#98118 EFF.:S-1624 TO X-6818	16	J.R.	J.R.	JL
026	98-11	THERMOSTAT & SENSOR REMOVED ON A/C AUXILIARY UNIT OC #98118 EFF. : X-6819	16	J.R.	J.R.	JL
027	98-11	NEW HAT RACK SPEAKER EFF.W/X6831 OC#98161	C, G3/3, 28	S.G.		

INDEX

A
- A/C & HEAT SYSTEM P. 15
- A/C AUXILIARY SYSTEM P. 16
- AIR DRYER P. 5
- ALARM AND SIGNAL P. 5
- ABS P. 24
- ARRANGEMENT - CABLE P. B
- ARRANGEMENT - HARNESS P. C
- ARRANGEMENT - SPARE WIRE P. D

B
- BACK-UP ALARM P. 8
- BACK-UP MONITOR P. 31

C
- CB OPTION P. 25
- CHARGING SYSTEM P. 1
- CIGAR LIGHTER P. 18
- CODE - CIRCUIT NUMBER P. E
- CODE - CIRCUIT BREAKER P. F
- CODE - CONNECTOR P. G
- CODE - DIODE P. H
- CODE - RELAY P. I
- CODE - RESISTOR P. J
- CODE - WIRING KEY P. K
- CRUISE CONTROL - D.D.E.C. P. 3

D
- D.D.E.C. III P. 3
- DIFFERENTIAL OIL TEMP. P. 5
- DIGITAL CLOCK P. 9

E
- ENGINE BLOCK HEATER P. 14
- ENGINE CONTROL P. 2
- ENGINE BRAKE SYSTEM P. 23
- ETHER COLD START P. 5
- EXTERIOR LIGHTING P. 6

F
- FAN CLUTCH-RADIATOR P. 5
- FUEL-LOW WARNING LTS P. 5
- FUEL PRIME PUMP P. 31
- FUEL WATER FILTER P. 5
- FRONT DESTINATION SIGN P. 31

G
- GALLEY P. 26
- GALLEY WITH FRIGO P. 27

H
- HIGH BUOY P. 21
- HOSTESS CHIME P. 14

I
- INTERIOR LIGHTING P. 10

K
- KNEELING SYSTEM P. 21

L
- LAVATORY P. 20
- LUGGAGE DOOR LOCK P. 22

M
- MIRROR-RR VIEW ADJUST. & HEATED P. 18

P
- PARKING BRAKE SWITCH P. 5
- PASSENGER CHIME P. 14
- POWER 12V OUTLET P. 18
- PRODRIVER P. 16
- PYROMETER P. 25

R
- RETARDER (WT) P. 23

S
- SPEEDOMETER (VDO) P. 19
- SOUND SYSTEM-P.A. ONLY P. 28
- SOUND SYSTEM-RADIO & P.A. P. 29

T
- TACHOMETER (VDO) P. 19
- TACHOGRAPH ELECTRONIC P. 19
- TRANSMISSION MANUAL P. 25
- TRANSMISSION WORLD P. 4

V
- VIDEO SYSTEM P. 30

W
- WATER HEATER PRE-HEAT P. 17
- WATER TANK HEATER P. 14
- WIPER & WASHER WINDSHIELD P. 9

INDEX

A
- A/C & HEAT SYSTEM P. 15
- A/C AUXILIARY SYSTEM P. 16
- AIR DRYER P. 5
- ALARM AND SIGNAL P. 5
- ABS P. 24
- ARRANGEMENT - CABLE P. B
- ARRANGEMENT - HARNESS P. C
- ARRANGEMENT - SPARE WIRE P. D

B
- BACK-UP ALARM P. 8
- BACK-UP MONITOR P. 31

C
- CB OPTION P. 25
- CHARGING SYSTEM P. 1
- CIGAR LIGHTER P. 18
- CODE - CIRCUIT NUMBER P. E
- CODE - CIRCUIT BREAKER P. F
- CODE - CONNECTOR P. G
- CODE - DIODE P. H
- CODE - RELAY P. I
- CODE - RESISTOR P. J
- CODE - WIRING KEY P. K
- CRUISE CONTROL - D.D.E.C. P. 3

D
- D.D.E.C. III P. 3
- DIFFERENTIAL OIL TEMP. P. 5
- DIGITAL CLOCK P. 9

E
- ENGINE BLOCK HEATER P. 14
- ENGINE CONTROL P. 2
- ENGINE BRAKE SYSTEM P. 23
- ETHER COLD START P. 5
- EXTERIOR LIGHTING P. 6

F
- FAN CLUTCH-RADIATOR P. 9
- FUEL-LOW WARNING LTS P. 5
- FUEL PRIME PUMP P. 31
- FUEL WATER FILTER P. 5
- FRONT DESTINATION SIGN P. 31

G
- GALLEY P. 26
- GALLEY WITH FRIGO P. 27

H
- HIGH BUOY P. 21
- HOSTESS CHIME P. 14

I
- INTERIOR LIGHTING P. 10

K
- KNEELING SYSTEM P. 21

L
- LAVATORY P. 20
- LUGGAGE DOOR LOCK P. 22

M
- MIRROR-RR VIEW ADJUST. & HEATED P. 18

P
- PARKING BRAKE SWITCH P. 5
- PASSENGER CHIME P. 14
- POWER 12V OUTLET P. 18
- PRODRIVER P. 16
- PYROMETER P. 25

R
- RETARDER (WT) P. 23

S
- SPEEDOMETER (VDO) P. 19
- SOUND SYSTEM-P.A. ONLY P. 28
- SOUND SYSTEM-RADIO & P.A. P. 29

T
- TACHOMETER (VDO) P. 19
- TACHOGRAPH ELECTRONIC P. 19
- TRANSMISSION MANUAL P. 25
- TRANSMISSION WORLD P. 4

V
- VIDEO SYSTEM P. 30

W
- WATER HEATER PRE-HEAT P. 17
- WATER TANK HEATER P. 14
- WIPER & WASHER WINDSHIELD P. 9

INDEX

A
- A/C & HEAT SYSTEM P. 15
- A/C AUXILIARY SYSTEM P. 16
- AIR DRYER P. 5
- ALARM AND SIGNAL P. 5
- ABS P. 24
- ARRANGEMENT - CABLE P. B
- ARRANGEMENT - HARNESS P. C
- ARRANGEMENT - SPARE WIRE P. D

B
- BACK-UP ALARM P. 8
- BACK-UP MONITOR P. 31

C
- CB OPTION P. 25
- CHARGING SYSTEM P. 1
- CIGAR LIGHTER P. 18
- CODE - CIRCUIT NUMBER P. E
- CODE - CIRCUIT BREAKER P. F
- CODE - CONNECTOR P. G
- CODE - DIODE P. H
- CODE - RELAY P. I
- CODE - RESISTOR P. J
- CODE - WIRING KEY P. K
- CRUISE CONTROL - D.D.E.C. P. 3

D
- D.D.E.C. III P. 3
- DIFFERENTIAL OIL TEMP. P. 5
- DIGITAL CLOCK P. 9

E
- ENGINE BLOCK HEATER P. 14
- ENGINE CONTROL P. 2
- ENGINE BRAKE SYSTEM P. 23
- ETHER COLD START P. 5
- EXTERIOR LIGHTING P. 6

F
- FAN CLUTCH-RADIATOR P. 9
- FUEL-LOW WARNING LTS P. 5
- FUEL PRIME PUMP P. 31
- FUEL WATER FILTER P. 5
- FRONT DESTINATION SIGN P. 31

G
- GALLEY P. 26
- GALLEY WITH FRIGO P. 27

H
- HIGH BUOY P. 21
- HOSTESS CHIME P. 14

I
- INTERIOR LIGHTING P. 10

K
- KNEELING SYSTEM P. 21

L
- LAVATORY P. 20
- LUGGAGE DOOR LOCK P. 22

M
- MIRROR-RR VIEW ADJUST. & HEATED P. 18

P
- PARKING BRAKE SWITCH P. 5
- PASSENGER CHIME P. 14
- POWER 12V OUTLET P. 18
- PRODRIVER P. 16
- PYROMETER P. 25

R
- RETARDER (WT) P. 23

S
- SPEEDOMETER (VDO) P. 19
- SOUND SYSTEM-RADIO P. 28

T
- TACHOMETER (VDO) P. 19
- TACHOGRAPH ELECTRONIC P. 19
- TRANSMISSION MANUAL P. 25
- TRANSMISSION WORLD P. 4

V
- VIDEO SYSTEM P. 29
- VIDEO SYSTEM & TV RECEIVER P. 30

W
- WATER HEATER PRE-HEAT P. 17
- WATER TANK HEATER P. 14
- WIPER & WASHER WINDSHIELD P. 9

INDEX

A
- A/C & HEAT SYSTEM P. 15
- A/C AUXILIARY SYSTEM P. 16
- AIR DRYER P. 5
- ALARM AND SIGNAL P. 5
- ABS P. 24
- ARRANGEMENT - CABLE P. B
- ARRANGEMENT - HARNESS P. C
- ARRANGEMENT - SPARE WIRE P. D

B
- BACK-UP ALARM P. 8
- BACK-UP MONITOR P. 31

C
- CB OPTION P. 25
- CHARGING SYSTEM P. 1
- CIGAR LIGHTER P. 18
- CODE - CIRCUIT NUMBER P. E
- CODE - CIRCUIT BREAKER P. F
- CODE - CONNECTOR P. G
- CODE - DIODE P. H
- CODE - RELAY P. I
- CODE - RESISTOR P. J
- CODE - WIRING KEY P. K
- CRUISE CONTROL - D.D.E.C. P. 3

D
- D.D.E.C. III P. 3
- DIFFERENTIAL OIL TEMP. P. 5
- DIGITAL CLOCK P. 9

E
- ENGINE BLOCK HEATER P. 14
- ENGINE CONTROL P. 2
- ENGINE BRAKE SYSTEM P. 23
- ETHER COLD START P. 5
- EXTERIOR LIGHTING P. 6

F
- FAN CLUTCH-RADIATOR P. 9
- FUEL-LOW WARNING LTS P. 5
- FUEL PRIME PUMP P. 31
- FUEL WATER FILTER P. 5
- FRONT DESTINATION SIGN P. 31

G
- GALLEY P. 26
- GALLEY WITH FRIGO P. 27

H
- HIGH BUOY P. 21
- HOSTESS CHIME P. 14

I
- INTERIOR LIGHTING P. 10

K
- KNEELING SYSTEM P. 21

L
- LAVATORY P. 20
- LUGGAGE DOOR LOCK P. 22

M
- MIRROR-RR VIEW ADJUST. & HEATED P. 18

P
- PARKING BRAKE SWITCH P. 5
- PASSENGER CHIME P. 14
- POWER 12V OUTLET P. 18
- PRODRIVER P. 16
- PYROMETER P. 25

R
- RETARDER (WT) P. 23

S
- SPEEDOMETER (VDO) P. 19
- SOUND SYSTEM-RADIO P. 28

T
- TACHOMETER (VDO) P. 19
- TACHOGRAPH ELECTRONIC P. 19
- TRANSMISSION MANUAL P. 25
- TRANSMISSION WORLD P. 4

V
- VIDEO SYSTEM P. 29
- VIDEO SYSTEM & TV RECEIVER P. 30

W
- WATER HEATER PRE-HEAT P. 17
- WATER TANK HEATER P. 14
- WIPER & WASHER WINDSHIELD P. 9
- WIRELESS MICRO RECEIVER P. 33

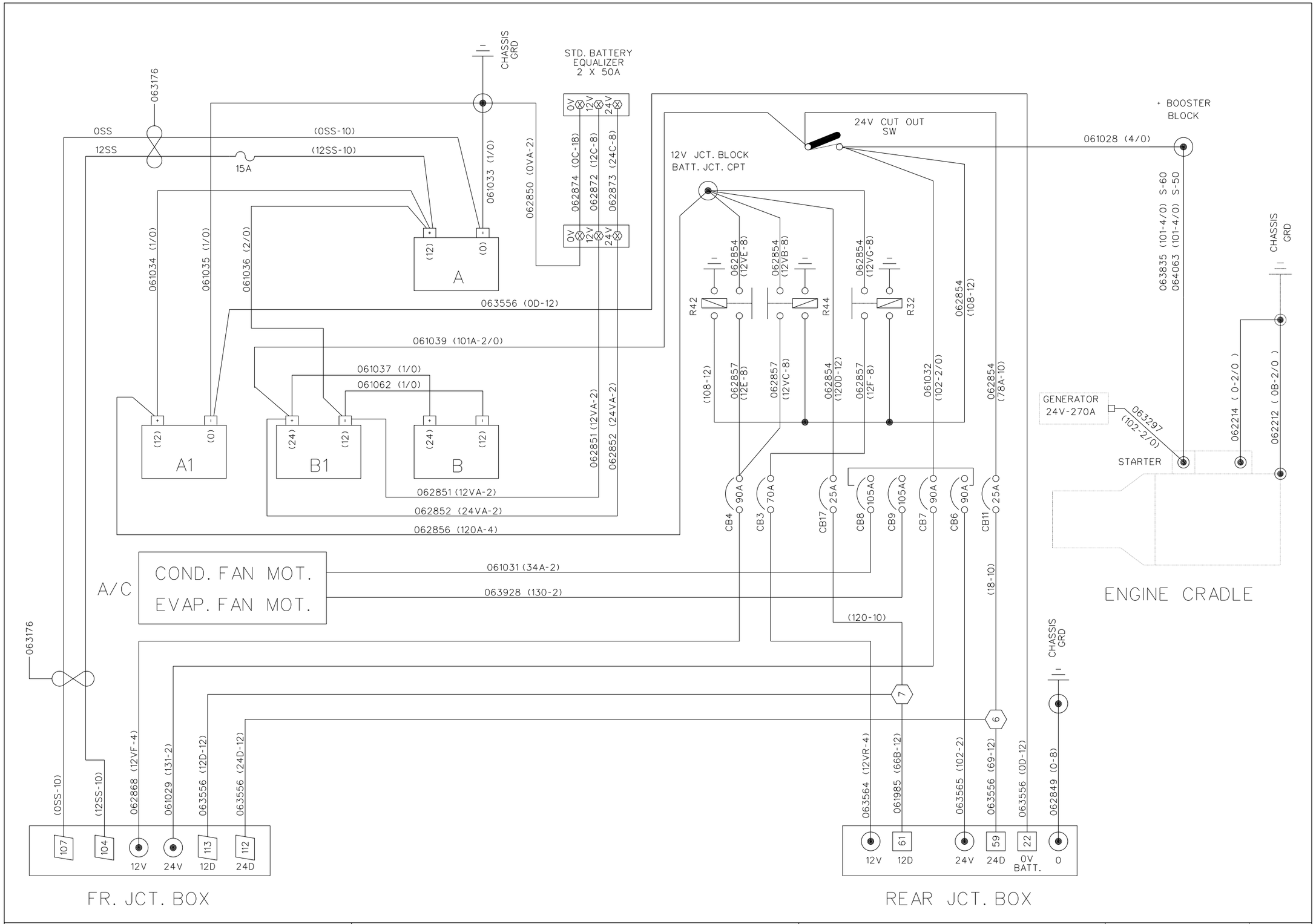

PREVOST CAR inc.	WIRING DIAGRAM	NO: D060871	P. B	REVISION 000

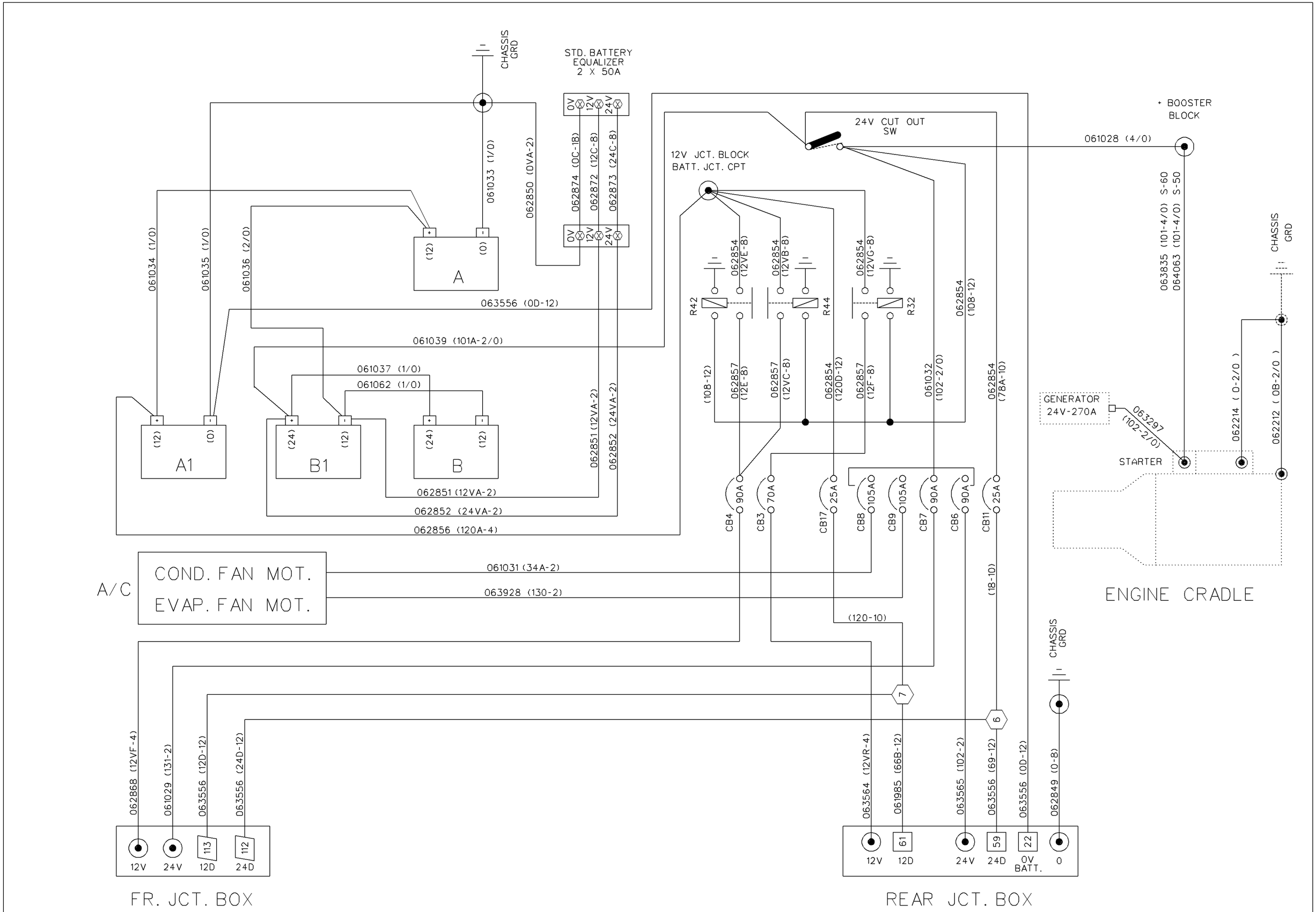

PREVOST CAR inc.	WIRING DIAGRAM	NO: D060871	P. B	REVISION 008

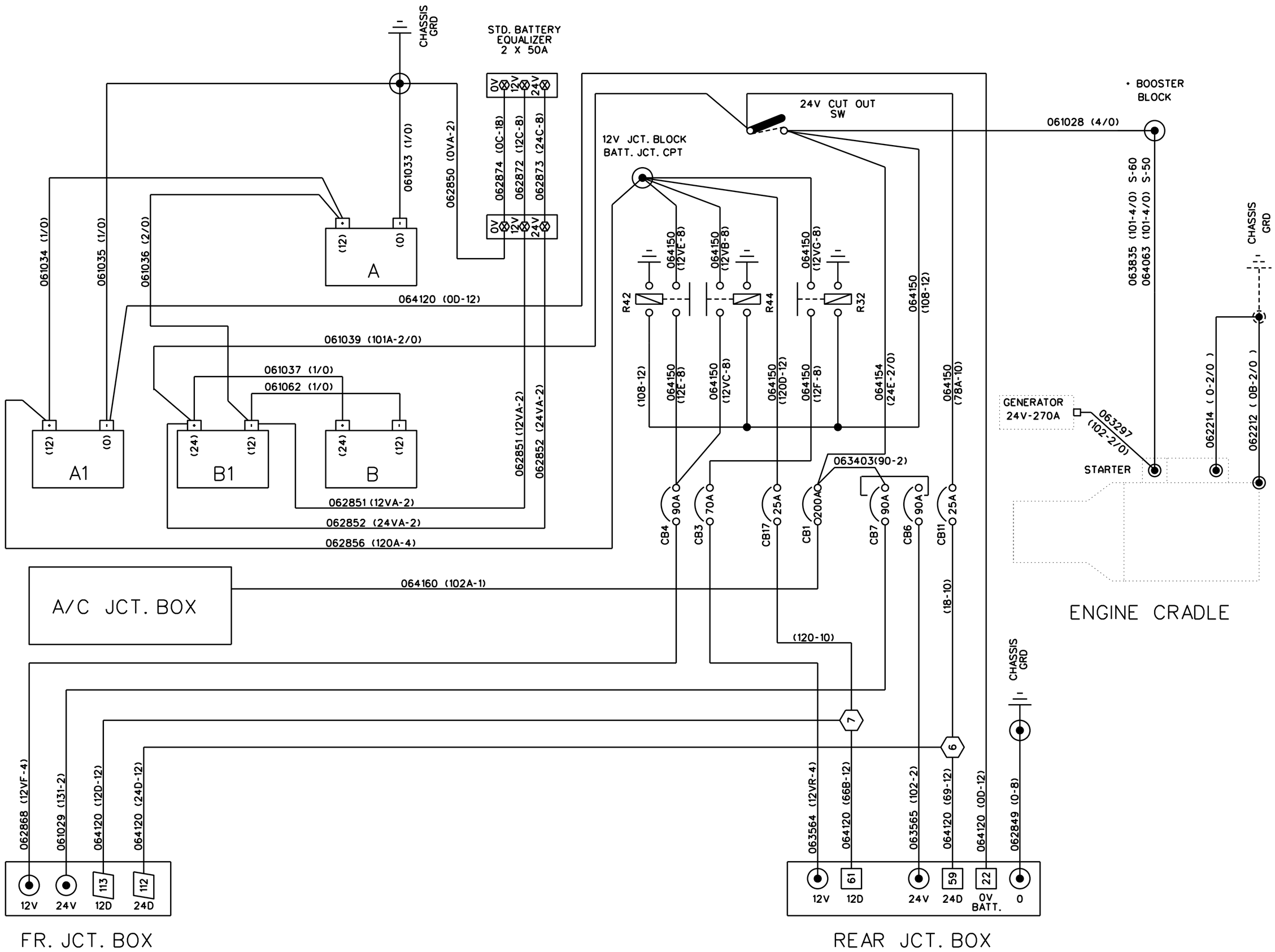

PREVOST CAR inc.	WIRING DIAGRAM	NO: D060871	P. B	REVISION 014

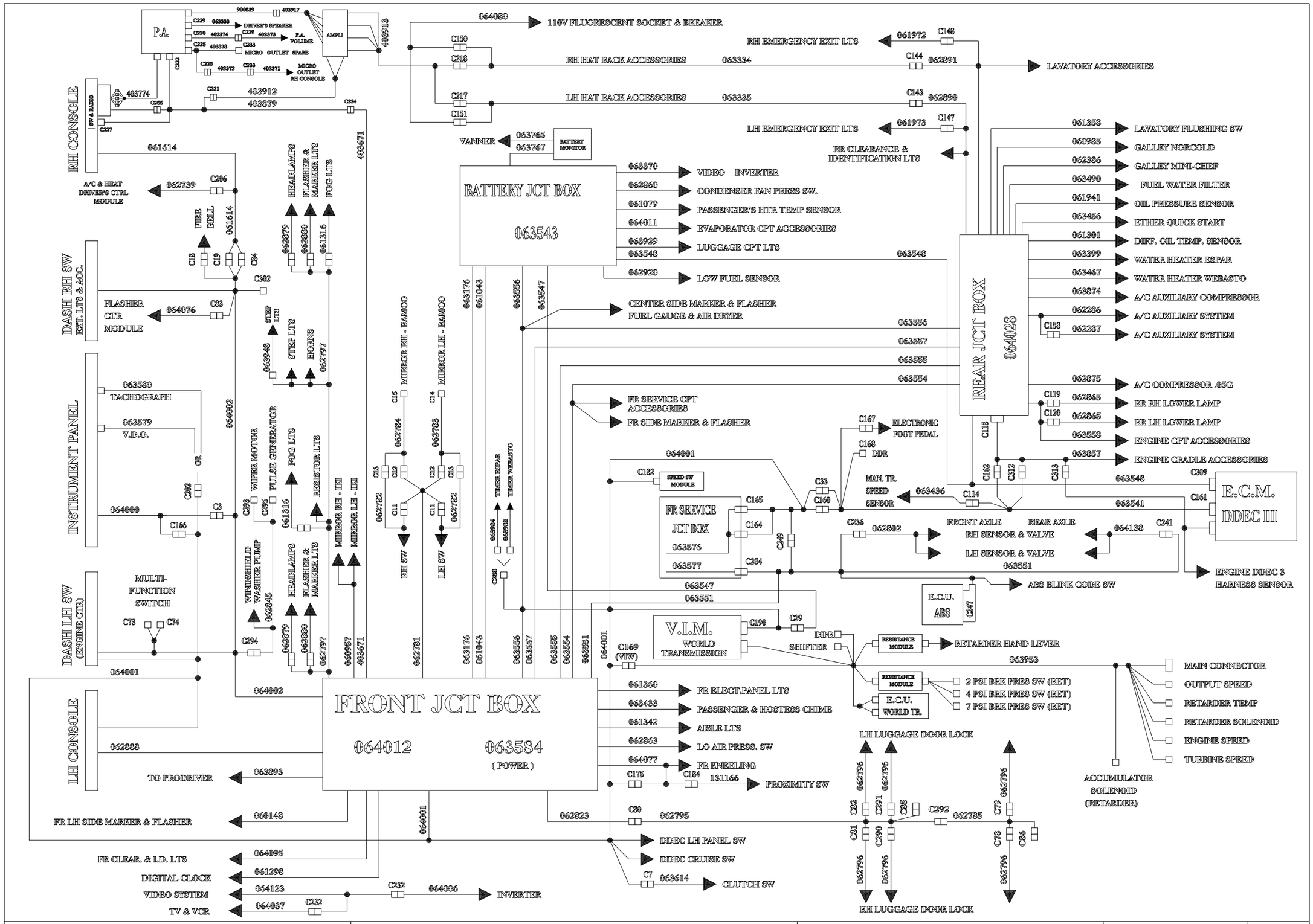

PREVOST CAR inc.	WIRING DIAGRAM	NO: D060871	P. C	PRIOR	REVISION 000

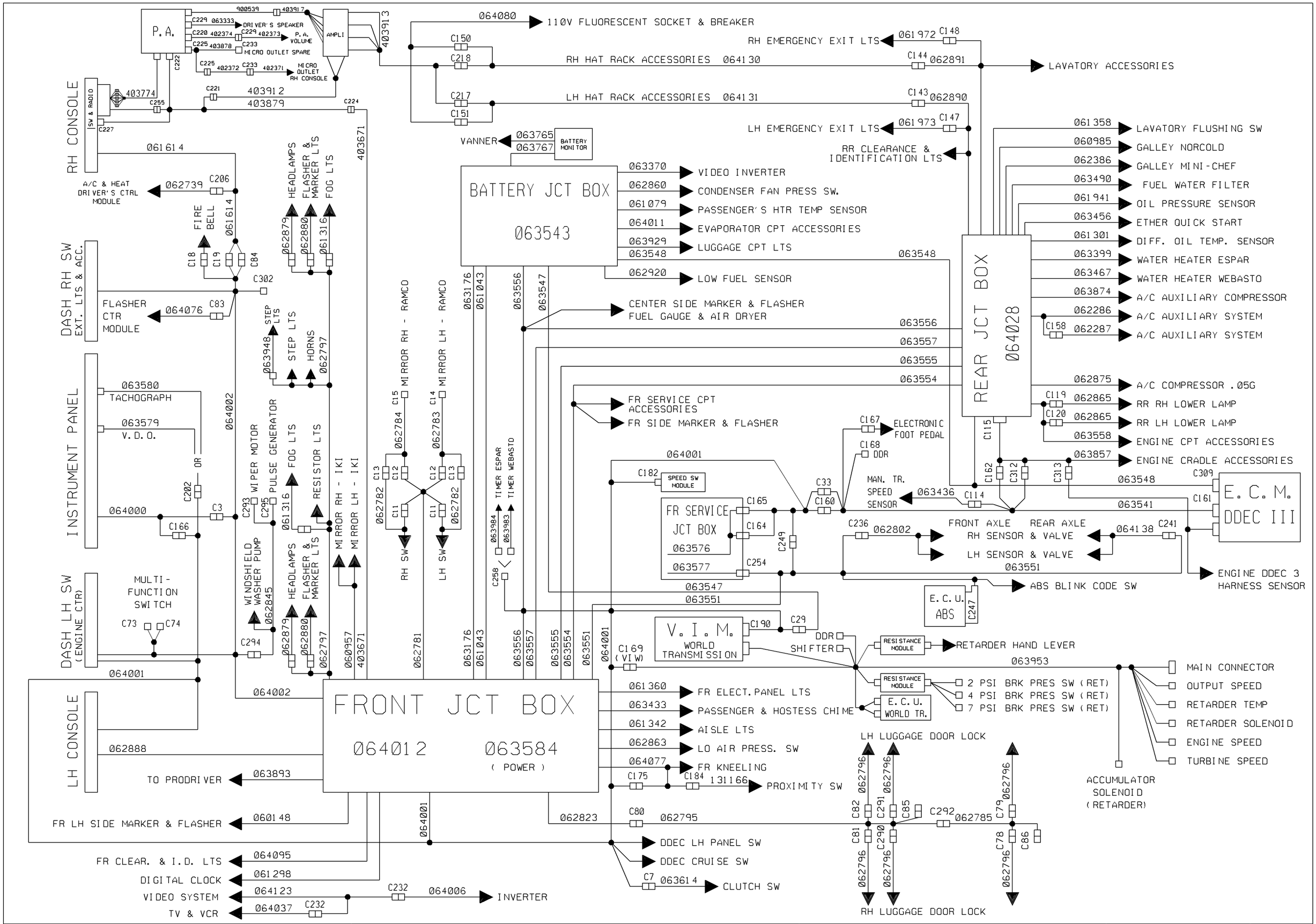

PREVOST CAR inc.	WIRING DIAGRAM	NO: D060871	P. C PRIOR	REVISION 002

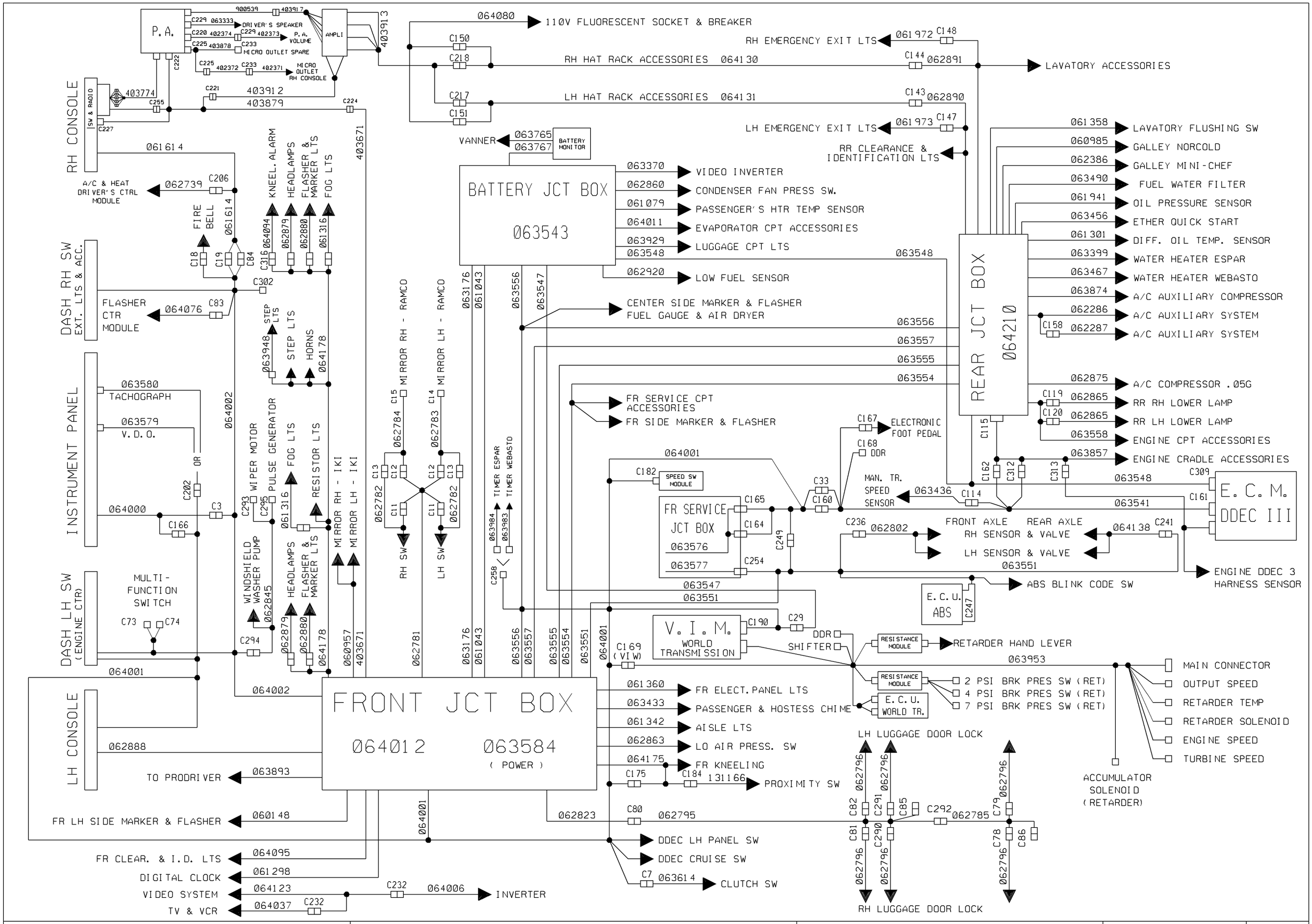

PREVOST CAR inc.	WIRING DIAGRAM	NO: D060871	P. C	REVISION 006

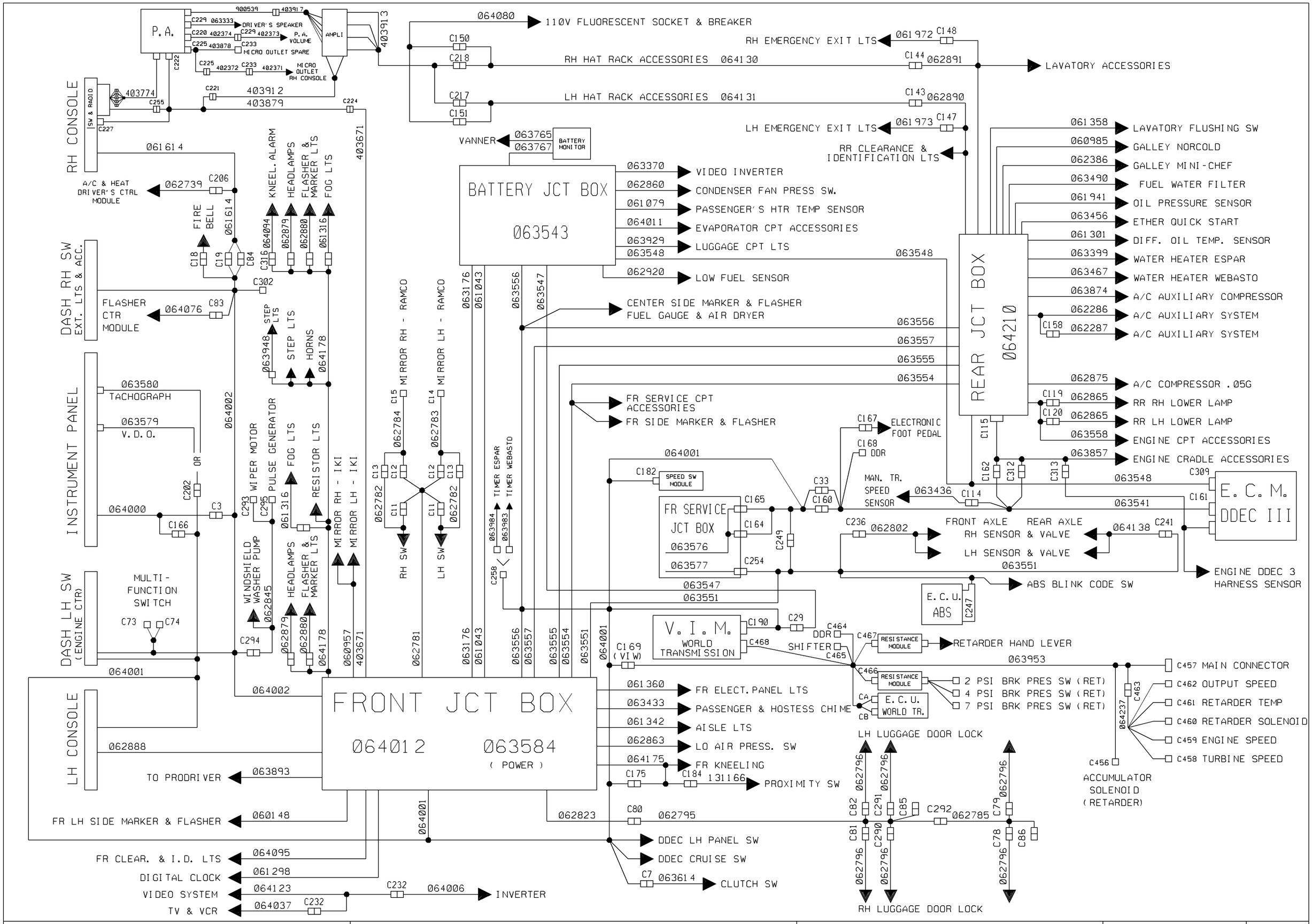

PREVOST CAR inc.	WIRING DIAGRAM	NO: D060871	P. C	REVISION 007

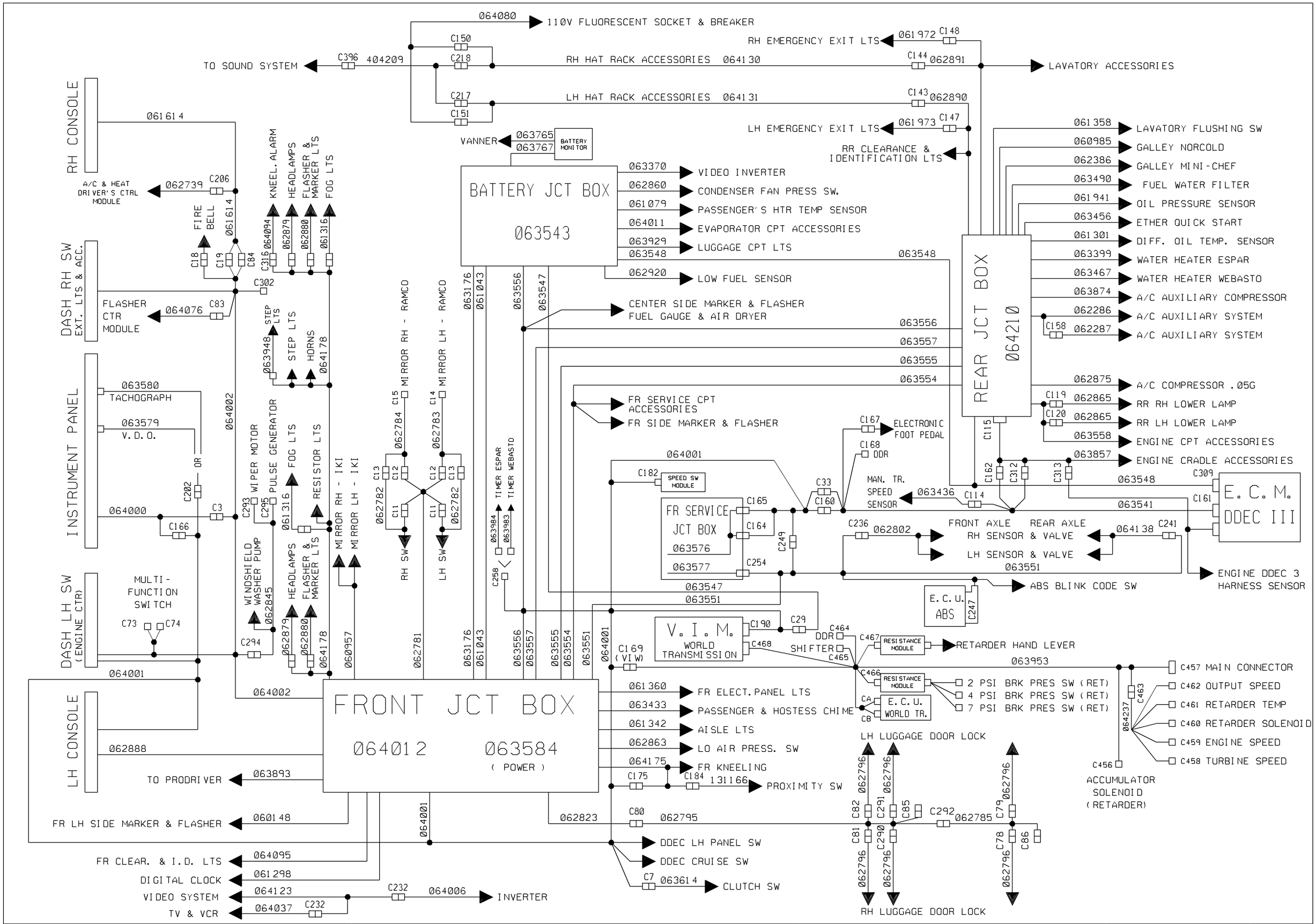

PREVOST CAR inc.	WIRING DIAGRAM	NO: D060871	P.C	REVISION 008

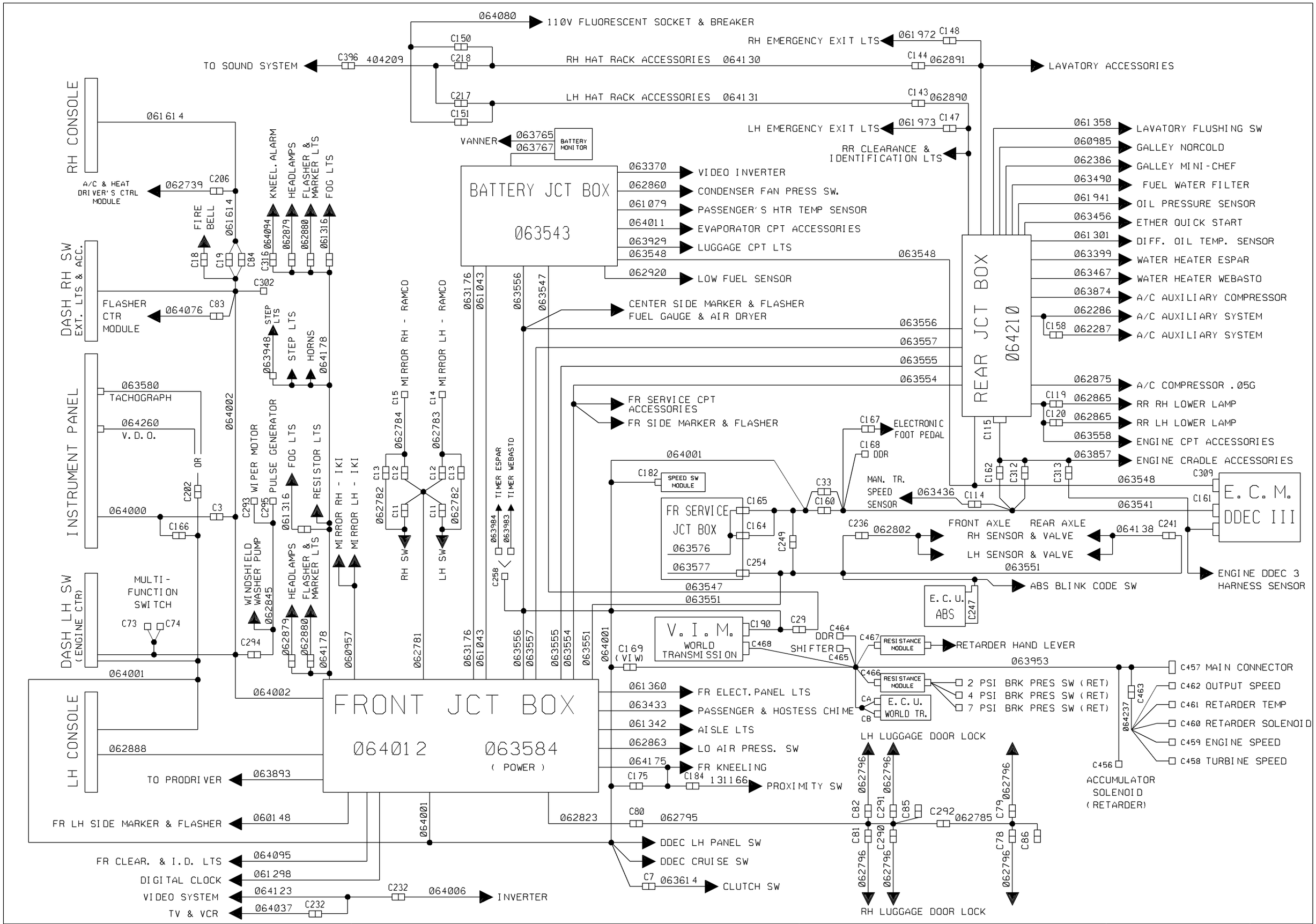

PREVOST CAR inc.	WIRING DIAGRAM	NO: D060871	P. C	REVISION 009

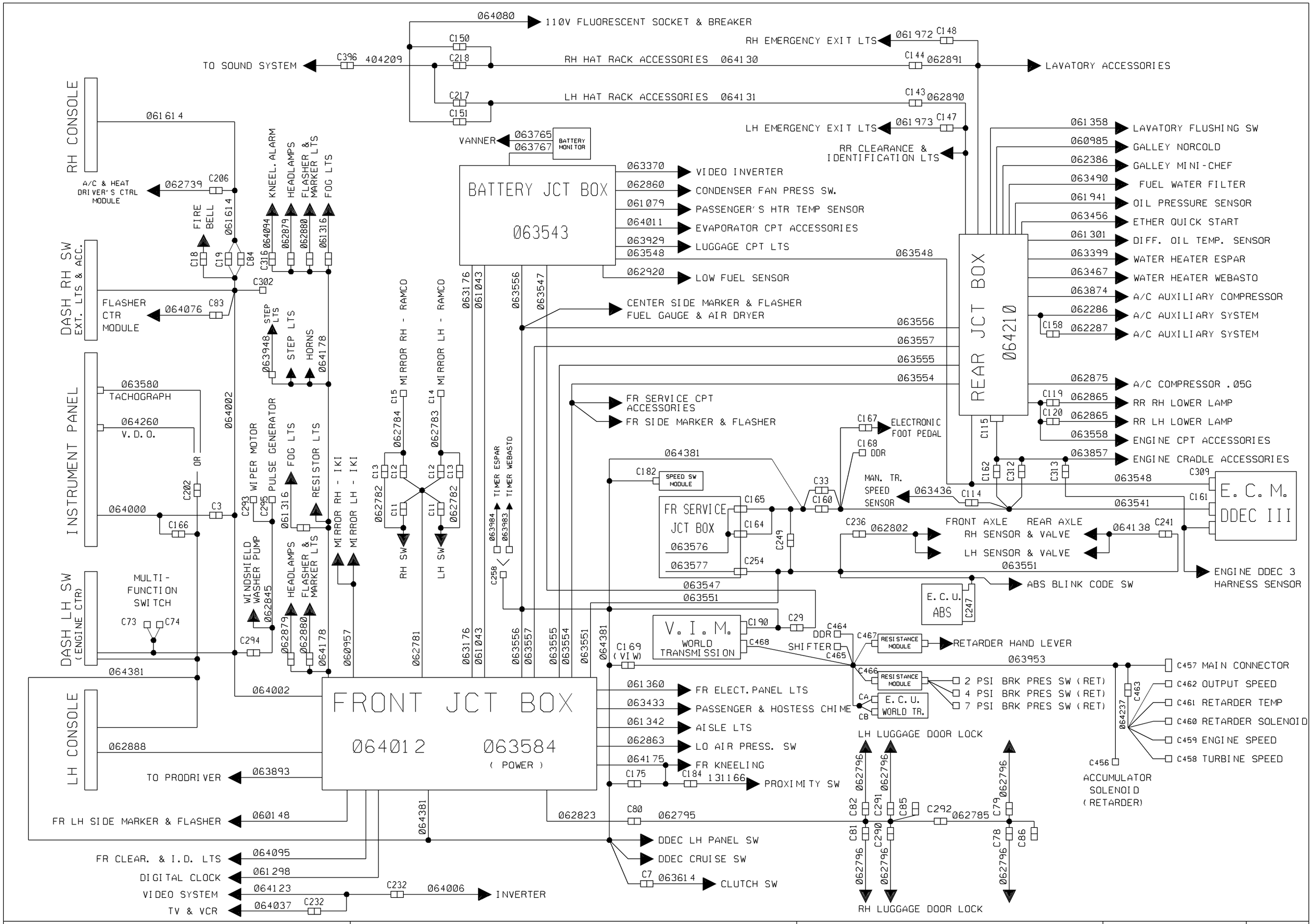

PREVOST CAR inc.	WIRING DIAGRAM	NO: D060871	P.C	REVISION 010

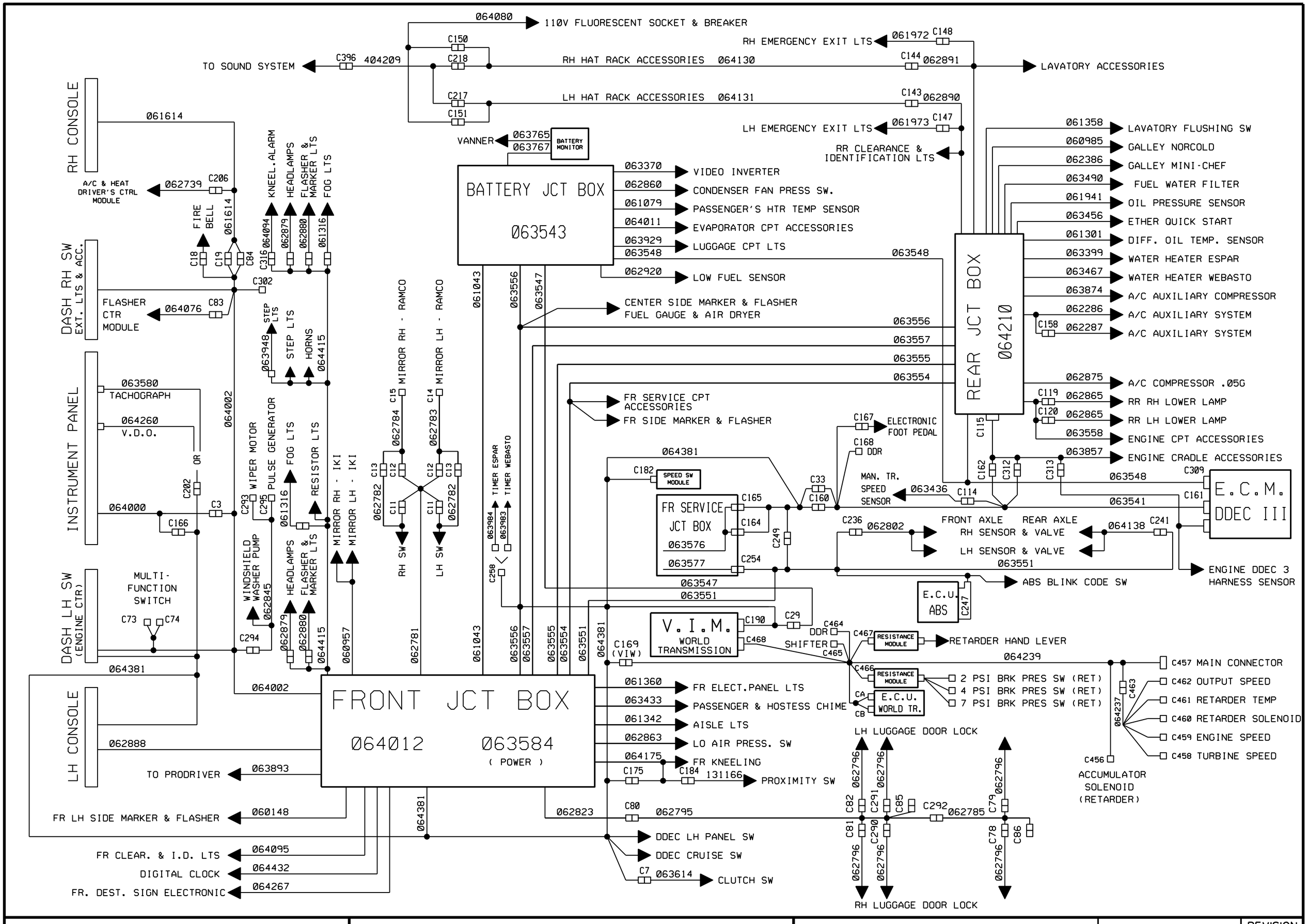

PREVOST CAR inc.	WIRING DIAGRAM	NO: D060871	P. C	REVISION 012

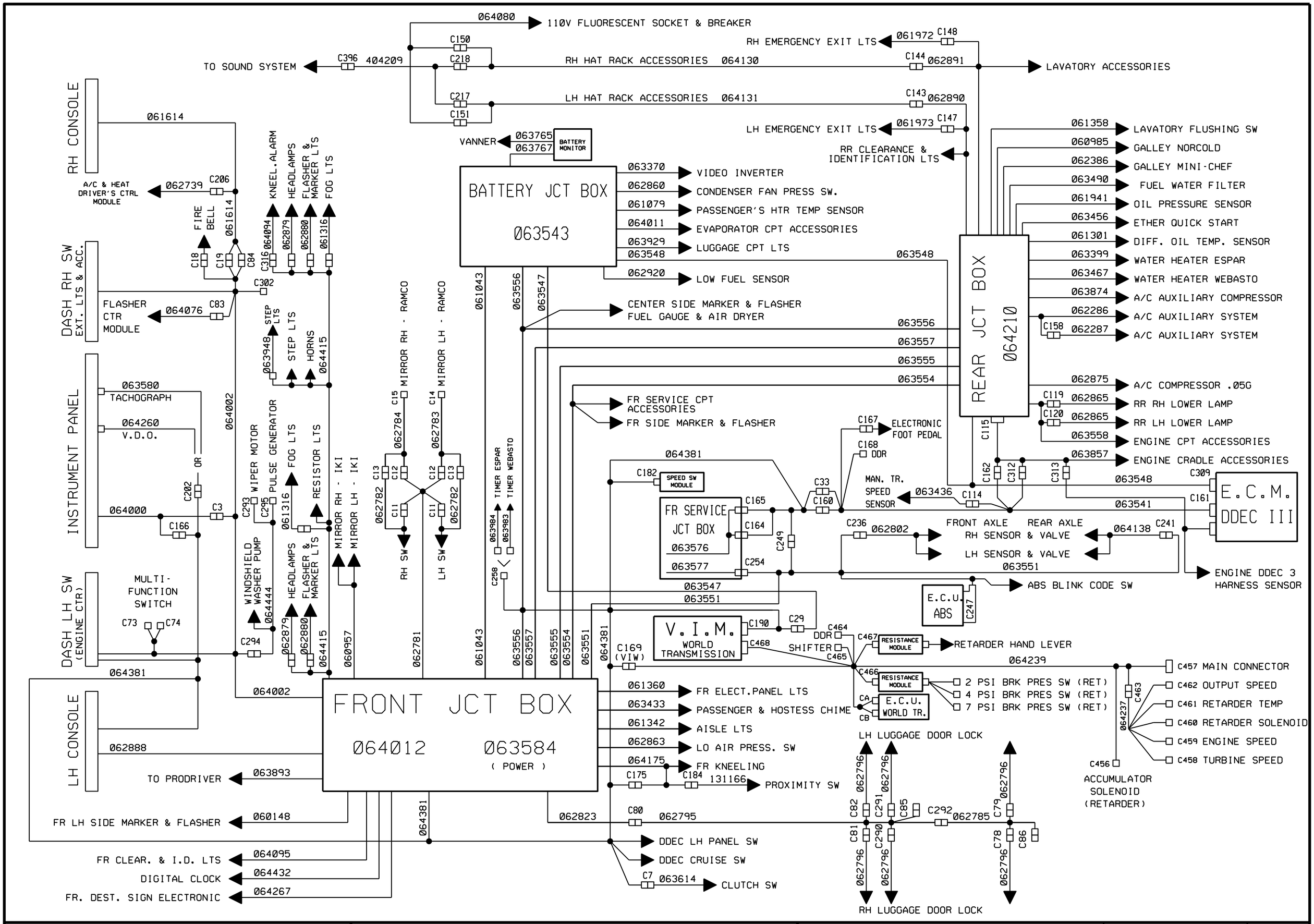

PREVOST CAR inc.	WIRING DIAGRAM	NO: D060871	P. C	REVISION 013

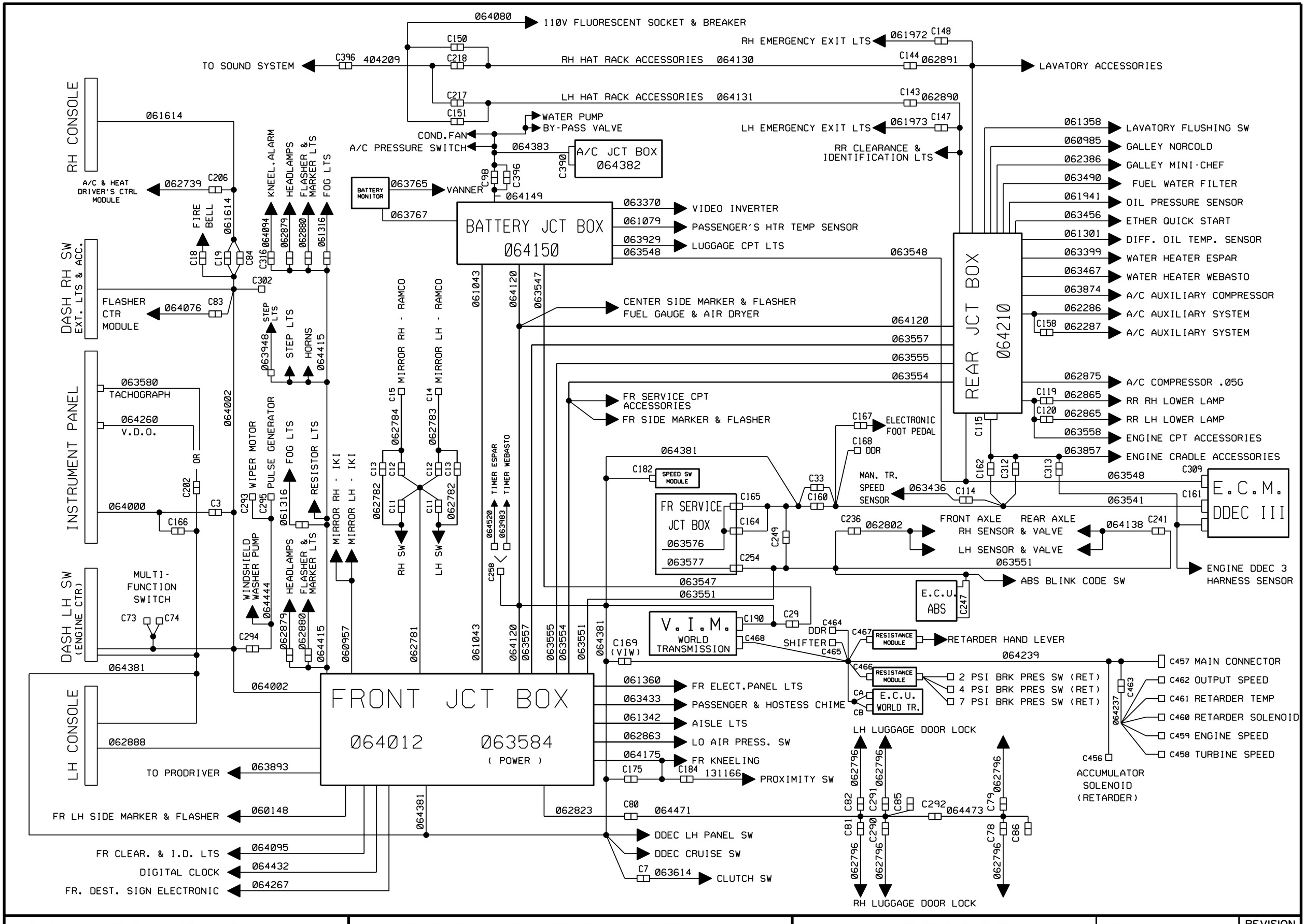

PREVOST CAR inc.	WIRING DIAGRAM	NO: D060871	P. C	REVISION 016

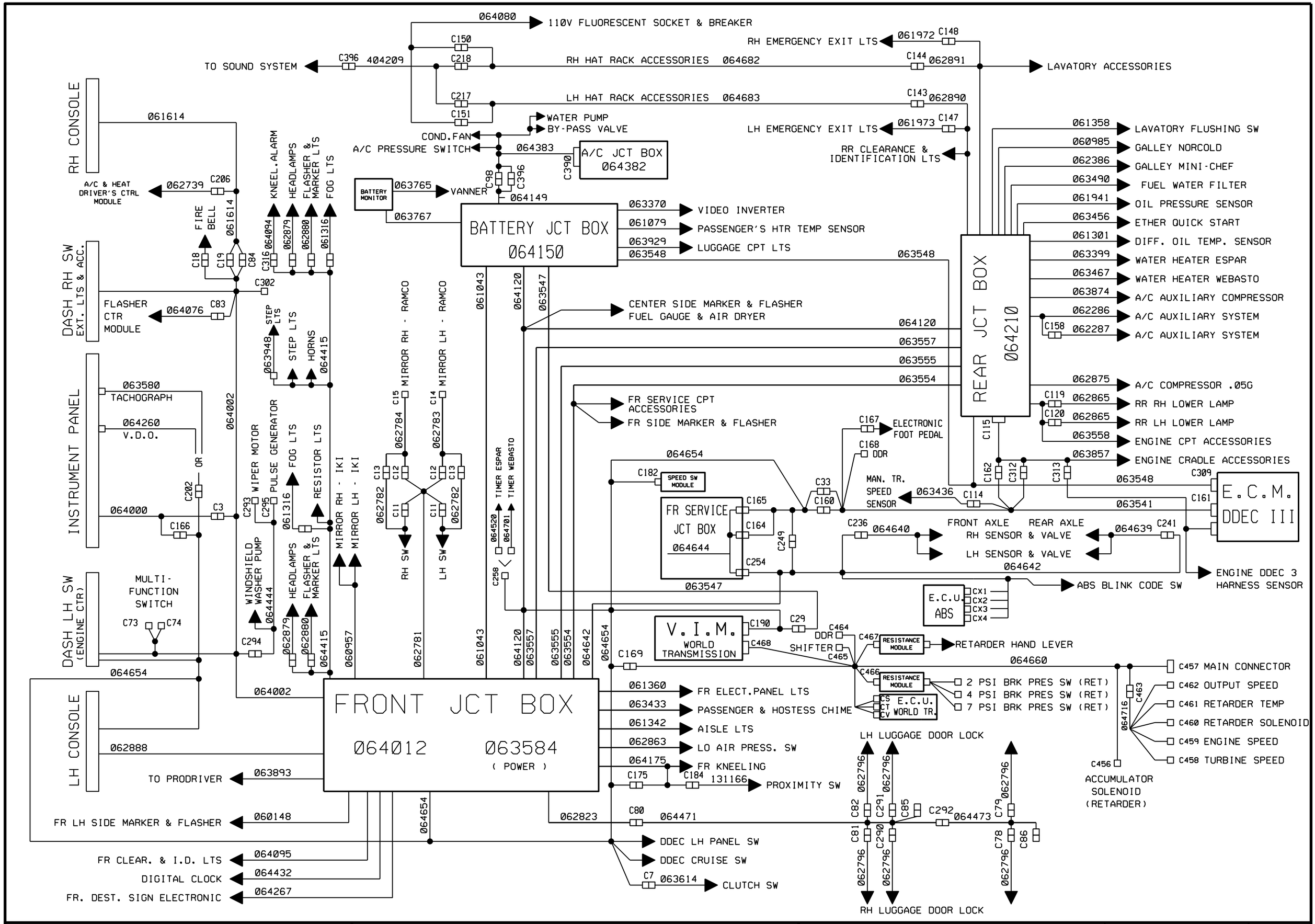

PREVOST CAR inc.	WIRING DIAGRAM	NO: D060871	P. C	REVISION 019

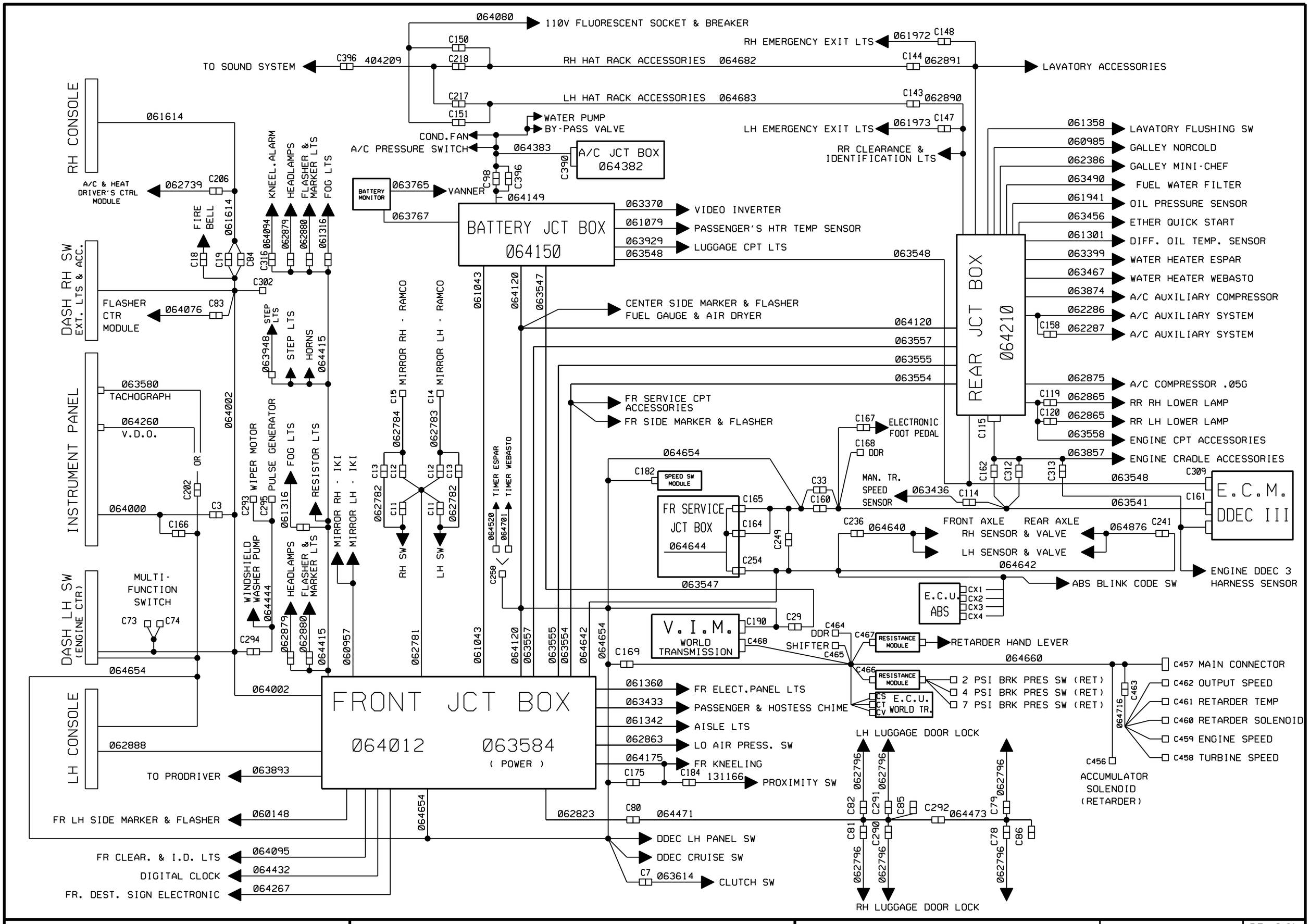

PREVOST CAR inc.	WIRING DIAGRAM	NO: D060871	P. C	REVISION 022

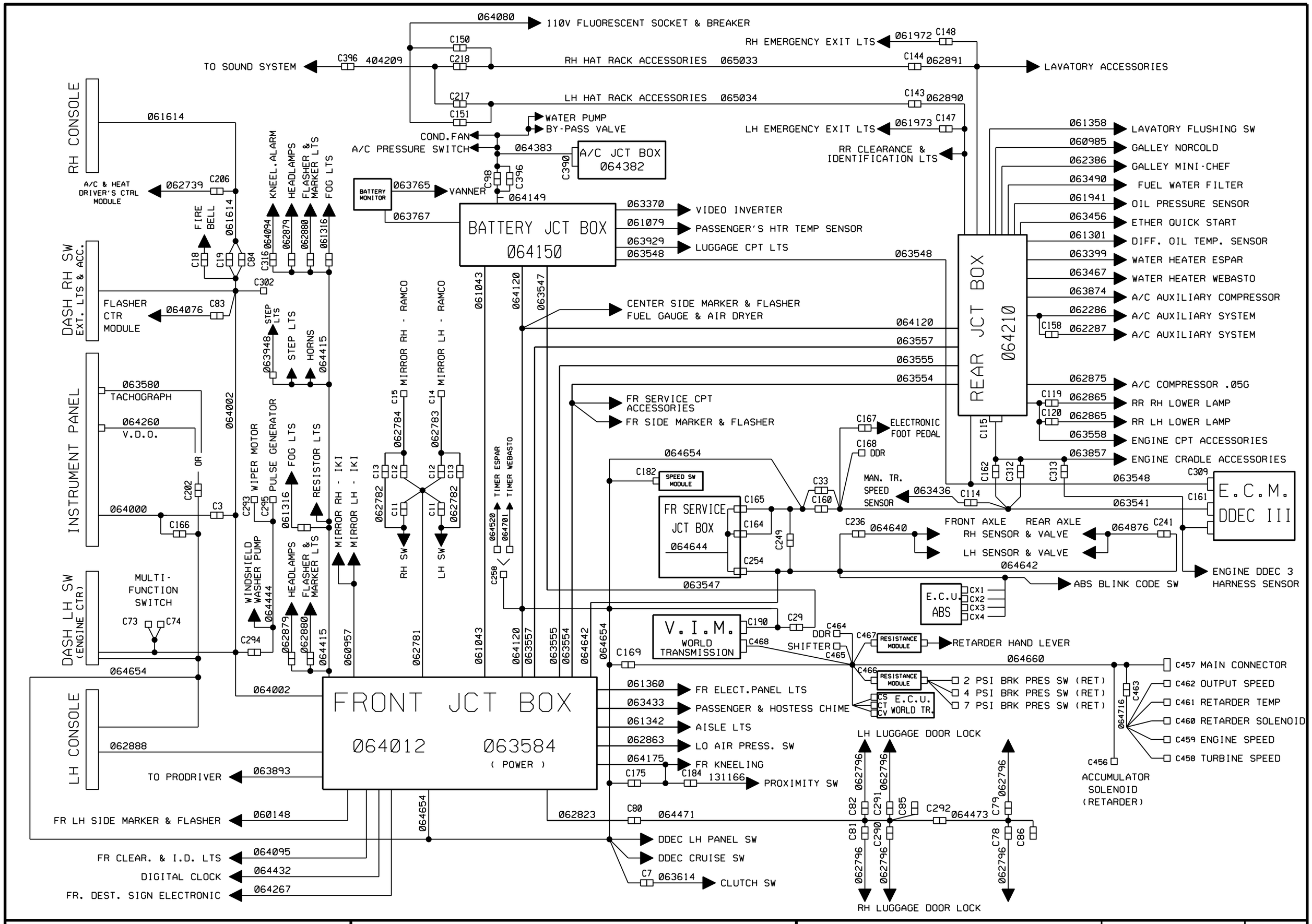
110V FLUORESCENT SOCKET & BREAKER
TO SOUND SYSTEM
RH HAT RACK ACCESSORIES
LH HAT RACK ACCESSORIES
RH EMERGENCY EXIT LTS
LH EMERGENCY EXIT LTS
RR CLEARANCE & IDENTIFICATION LTS
LAVATORY ACCESSORIES
WATER PUMP
BY-PASS VALVE
COND.FAN
A/C PRESSURE SWITCH
A/C JCT BOX 064382
BATTERY MONITOR
VANNER
BATTERY JCT BOX 064150
VIDEO INVERTER
PASSENGER'S HTR TEMP SENSOR
LUGGAGE CPT LTS
CENTER SIDE MARKER & FLASHER
FUEL GAUGE & AIR DRYER
FR SERVICE CPT ACCESSORIES
FR SIDE MARKER & FLASHER
ELECTRONIC FOOT PEDAL
DDR
MAN. TR. SPEED SENSOR
FRONT AXLE RH SENSOR & VALVE
REAR AXLE LH SENSOR & VALVE
ABS BLINK CODE SW
ENGINE DDEC 3 HARNESS SENSOR
E.C.M. DDEC III
REAR JCT BOX 064210
LAVATORY FLUSHING SW
GALLEY NORCOLD
GALLEY MINI-CHEF
FUEL WATER FILTER
OIL PRESSURE SENSOR
ETHER QUICK START
DIFF. OIL TEMP. SENSOR
WATER HEATER ESPAR
WATER HEATER WEBASTO
A/C AUXILIARY COMPRESSOR
A/C AUXILIARY SYSTEM
A/C AUXILIARY SYSTEM
A/C COMPRESSOR .05G
RR RH LOWER LAMP
RR LH LOWER LAMP
ENGINE CPT ACCESSORIES
ENGINE CRADLE ACCESSORIES
RH CONSOLE
A/C & HEAT DRIVER'S CTRL MODULE
DASH RH SW EXT. LTS & ACC.
FLASHER CTR MODULE
INSTRUMENT PANEL
TACHOGRAPH
V.D.O.
DASH LH SW (ENGINE CTR)
MULTI-FUNCTION SWITCH
LH CONSOLE
TO PRODRIVER
FR LH SIDE MARKER & FLASHER
FR CLEAR. & I.D. LTS
DIGITAL CLOCK
FR. DEST. SIGN ELECTRONIC
FRONT JCT BOX 064012 063584 (POWER)
FR ELECT.PANEL LTS
PASSENGER & HOSTESS CHIME
AISLE LTS
LO AIR PRESS. SW
FR KNEELING
PROXIMITY SW
DDEC LH PANEL SW
DDEC CRUISE SW
CLUTCH SW
SPEED SW MODULE
FR SERVICE JCT BOX 064644
V.I.M. WORLD TRANSMISSION
E.C.U. ABS
RESISTANCE MODULE
RETARDER HAND LEVER
2 PSI BRK PRES SW (RET)
4 PSI BRK PRES SW (RET)
7 PSI BRK PRES SW (RET)
E.C.U. WORLD TR.
LH LUGGAGE DOOR LOCK
RH LUGGAGE DOOR LOCK
ACCUMULATOR SOLENOID (RETARDER)
C457 MAIN CONNECTOR
C462 OUTPUT SPEED
C461 RETARDER TEMP
C460 RETARDER SOLENOID
C459 ENGINE SPEED
C458 TURBINE SPEED
MIRROR RH - RAMCO
MIRROR LH - RAMCO
MIRROR RH - IKI
MIRROR LH - IKI
RH SW
LH SW
TIMER ESPAR
TIMER WEBASTO
WIPER MOTOR
PULSE GENERATOR
FOG LTS
RESISTOR LTS
WINDSHIELD WASHER PUMP
HEADLAMPS
FLASHER & MARKER LTS
KNEEL.ALARM
FIRE BELL
STEP LTS
HORNS
064080
061614
062739
064076
063765
063767
064149
063370
061079
063929
063548
064120
063557
063555
063554
064654
064002
064000
063580
064260
062888
063893
060148
064095
064432
064267
062823
064471
064473
064660
064642
064640
064876
064716
064520
064701
064415
064444
064520
061043
060957
062781
062784
062783
062782
062796
131166
063614
063436
063541
061358
060985
062386
063490
061941
063456
061301
063399
063467
063874
062286
062287
062875
062865
063558
063857
061972
061973
062891
062890
062879
062880
061316
064094
064383
064382
064150
064210
064644
064642
064660
064716
064471
064473
064002
064654
064000
064076
064415
064444
064520
064701
064432
064267
064095
064260
063580
063948
063893
060148
062888
062823
062796
062784
062783
062782
062781
062879
062880
062865
062287
062286
062891
062890
062972
062973
062796
062796
062796

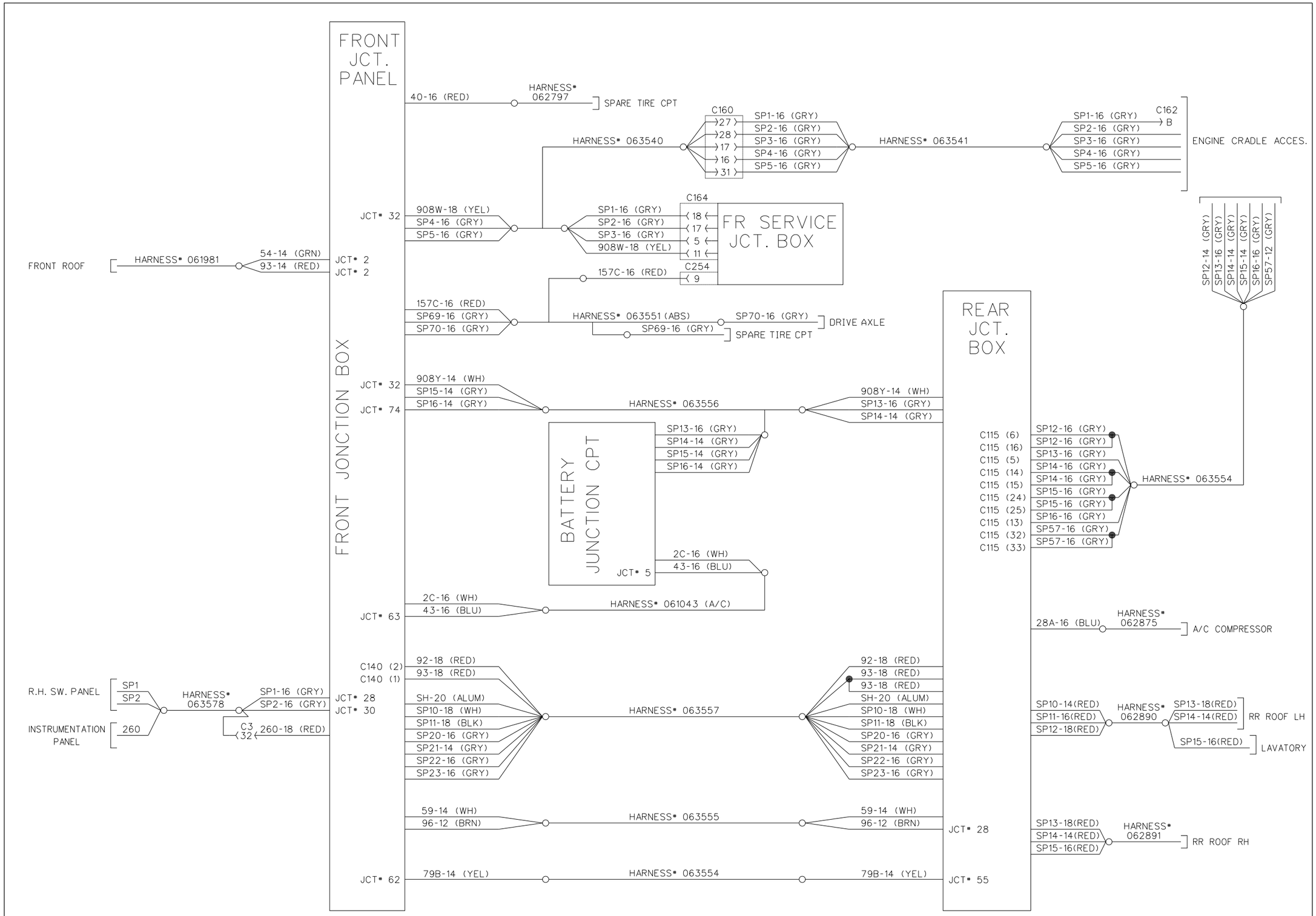

PREVOST CAR inc.	WIRING DIAGRAM	NO: D060871	P. D	REVISION 000

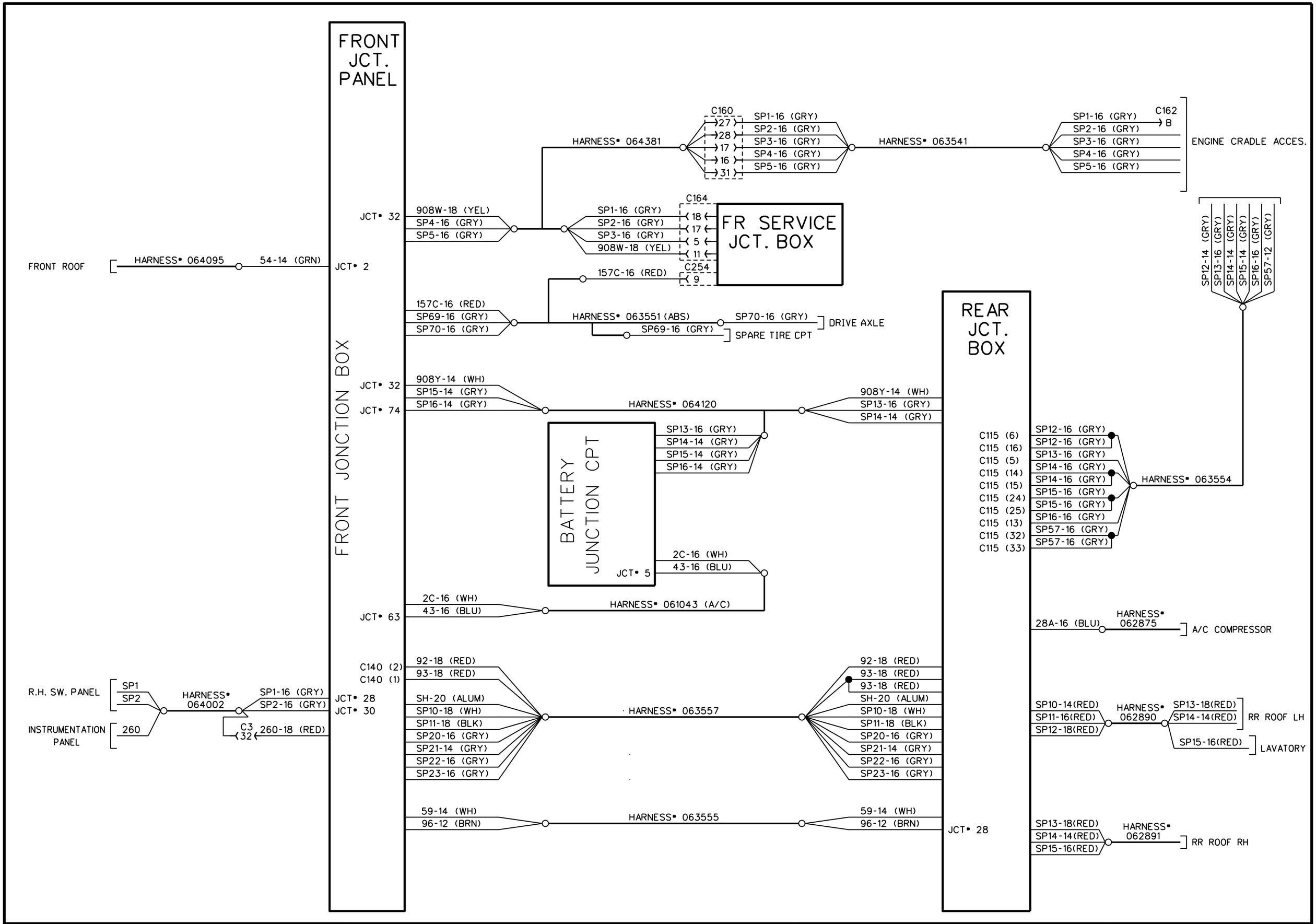

PREVOST CAR inc.	WIRING DIAGRAM	NO: D060871	P. D	REVISION 015

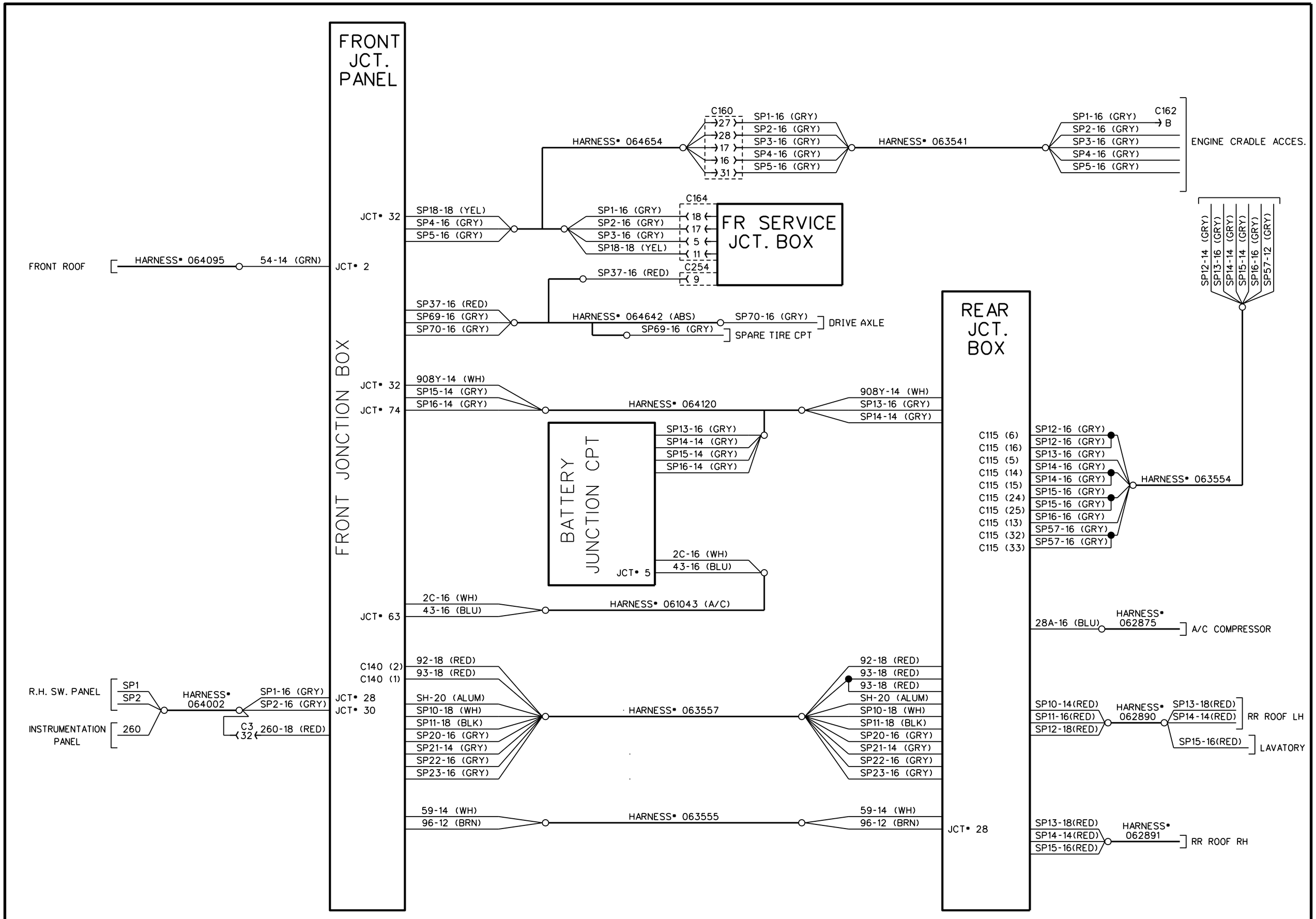

PREVOST CAR inc.	WIRING DIAGRAM	NO: D060871	P. D	REVISION 018

CIRCUIT NUMBER CODE — Page E : 1

No.	SYSTEM
0	GRD BATTERY A TO GRD STUD
0	GRD BATTERY A1 TO GRD STUD
0	GRD STARTER MOTOR TO GRD STUD
0	FJP - GRD
0	RJB - GRD
0	BJP - GRD
0A	RJB - GRD
0A	FR SERV JCT BOX - GRD
0B	FJP - GRD
0B	RJB - GRD
0BE	OV BATTERY MONITOR
0C	RJB - GRD
0D	FJP - GRD
0D	RJB - GRD
0E	RJB - GRD
0F	RJB - GRD
0H	FJP - GRD
0M	BACK-UP MONITOR
0P	RJB - GRD
0SA	FJP - BATTERY GRD
0SS	FJP - BATTERY GRD
0T	FJP - GRD
0T	FR SERVICE CPT-GRD
0V	FJP - GRD
0VA	GRD STUD TO BAT.EQUALIZER
0W	FJP - GRD
0W	WORLD TRANSM. VM CHASSIS GRD
0WA	PRE_HEAT WATER HEATER WEBASTO
0WB	PRE_HEAT WATER HEATER WEBASTO
0X	RJB - GRD
0Y	ABS SYSTEM-GRD
0Y1	ABS SYSTEM-GRD
2	A/C & HEAT SYSTEM-CONSENSER
2A	A/C & HEAT SYSTEM-CONSENSER
2C	A/C & HEAT SYSTEM-CONDENSER
2D	A/C & HEAT SYSTEM-CONDENSER
3	A/C & HEAT SYSTEM-EVAPORATOR
3A	A/C & HEAT SYSTEM-EVAPORATOR
3B	A/C & HEAT SYSTEM-EVAPORATOR
4	CHME-PASSENGER & HOSTESS
4A	CHME-PASSENGER & HOSTESS
4B	CHME-PASSENGER & HOSTESS
4C	CHME-PASSENGER & HOSTESS
4D	CHME-PASSENGER & HOSTESS
4E	CHME-PASSENGER & HOSTESS
5	INTERIOR LTS-EMERGENCY EXIT LTS
5A	INTERIOR LTS-EMERGENCY EXIT LTS
5C	INTERIOR LTS-EMERGENCY EXIT LTS
6	INTERIOR LTS-AISLE LTS
7	INTERIOR LTS-STEPWELL LTS
8A	INTERIOR LTS-AISLE & EMERG.LTS
8B	INTERIOR LTS-AISLE & EMERG.LTS
9	INTERIOR LTS-ENGINE CPT.
9	INTERIOR LTS-RR JCT BOX
9	INTERIOR LTS-FR SERVICE CPT
9A	INTERIOR LTS-FR JCT PANEL
9E	CHME-PASSENGER & HOSTESS
10	A/C & HEAT SYSTEM-LO PRES.
10	INTERIOR LTS-LUGGAGE CPT
10A	INTERIOR LTS-LUGGAGE CPT
10A	A/C AUXILIARY-CLUTCH

No.	SYSTEM
10B	INTERIOR LTS-LUGGAGE CPT
10C	INTERIOR LTS-LUGGAGE CPT
11	FR.DESTINATION SIGN
11A	FR.DESTINATION SIGN
11B	FR.DESTINATION SIGN
11C	FR.DESTINATION SIGN
11D	FR.DESTINATION SIGN
11E	FR.DESTINATION SIGN
11K	FR.DESTINATION SIGN
11P	FR.DESTINATION SIGN
12	12V BATTERY A1 TO BATTERY A
12	12V BATTERY B1 TO BATTERY A
12	12V BATTERY B1 TO BATTERY B
12	12V VIDEO SYSTEM
12A	FR JCT PANEL 12V DISC SW
12A	RR JCT BOX 12V DISC SW
12B	FR JCT PANEL 12V DISC SW
12BE	12V BATTERY MONITOR
12C	RR JCT BOX 12V DISC SW
12D	FR JCT PANEL 12V HOT WIRE
12E	FR JCT PANEL 12V DISC SW
12F	RR JCT BOX 12V DISC SW
12G	FR JCT PANEL 12V DISC SW
12I	FR JCT PANEL 12V IGNITION
12IF	FR JCT PANEL 12V IGNITION
12M	BACK-UP MONITOR
12P	FR JCT PANEL 12V DISC SW
12P	12V VIDEO SYSTEM
12SA	12V BATTERY-SOUND SYSTEM
12SB	12V BATTERY-SOUND SYSTEM
12SC	12V BATTERY-SOUND SYSTEM
12SS	12V BATTERY-SOUND SYSTEM
12T	RR JCT BOX 12V DISC SW
12VA	12V BATTERY POST TO EQUALIZER
12VF	12V FR JCT PANEL
12VI	RR JCT BOX 12V IGNITION
12VR	RR JCT BOX 12V DISC SW
12W	12V HOT WIRE DOES NFEED
13A	ALARM & SIGNAL-LO AIR PRIM.
13B	ALARM & SIGNAL-LO AIR SEC.
14	LAVATORY-FLUSHING SW
15	EXTERIOR LTS-MULTIFUNC LEVEL
15A	ALARM & SIGNAL-DF. OIL TEMP
15	WIPER & WASHER SYSTEM
15A	ALARM & SIGNAL-DF. OIL TEMP
16	SPEEDOMETER SIGNAL (+)
16T	SPEED SW SIGNAL IN (+)
17	EXTERIOR LTS-FLASHER UNT
17A	EXTERIOR LTS-FLASHER UNT
18	ETHER COLD START SYST.
20	SPEEDOMETER SIGNAL (-)
20T	SPEED SW SIGNAL IN (-)
21	EXTERIOR LTS-DIRECTIONNAL LH
21A	EXTERIOR LTS-DIRECTIONNAL LH
21B	EXTERIOR LTS-DIRECTIONNAL LH
21H	EXTERIOR LTS-HAZARD SIGNAL
23	EXTERIOR LTS-DIRECTIONNAL RH
23A	EXTERIOR LTS-DIRECTIONNAL RH
23B	EXTERIOR LTS-DIRECTIONNAL RH
23E	KNEELING-RH EXT.FLASHING LTS
23F	KNEELING-RH EXT.FLASHING LTS

CIRCUIT NUMBER CODE — Page E : 1

No.	SYSTEM
23H	EXTERIOR LTS-HAZARD SIGNAL
24	BATTERY B TO BATTERY B1
24	BOOSTER TO 24V DISC SW
24A	RR JCT BOX 24V DISC SW
24A	FR JCT PANEL 24V DISC SW
24B	FR JCT PANEL 24V DISC SW
24BE	BATTERY MONITOR
24C	FR JCT PANEL 24V DISC SW
24F	FR JCT PANEL 24V DISC SW
24I	FR JCT PANEL 24V IGNITION
24I	RR JCT BOX 24V IGNITION
24IA	FR JCT PANEL 24V IGNITION
24IB	FR JCT PANEL 24V IGNITION
24K	FR JCT PANEL 24V DISC SW
24P	FR JCT PANEL 24V DISC SW
24R	RR JCT BOX 24V DISC SW
24S	RR JCT BOX 24V DISC SW
24T	RR JCT BOX 24V DISC SW
24VA	24V BATTERY POST TO EQUALIZER
24VI	RR JCT BOX 24V IGNITION
24VIF	FR JCT PANEL 24V IGNITION
24VD	FR JCT PANEL 24V HOT WIRE
24VD	RR JCTY BOX 24V HOT WIRE
24VF	FR JCT PANEL 24V DISC SW
24X	24V SPEED SW & KNEELING
25	12VAC GEN RLY ON SIGNAL
25A	NOT GENERATOR-WARNING LT
25B	EXTERIOR LTS-DAYTIME RUN LTS
25L	12VAC GEN RLY ON SIGNAL
27	LAVATORY-EMERGENCY BUZZER
28	A/C & HEAT SYSTEM-WARNING LT
29	A/C & HEAT SYSTEM-DRIVER'S HTR
29A	A/C & HEAT SYSTEM-DRIVER'S HTR
29B	A/C & HEAT SYSTEM-DRIVER'S HTR
30	GALLEY SYSTEM
30A	GALLEY SYSTEM
31A	A/C & HEAT SYSTEM-PRESSURE SW
31B	A/C & HEAT SYSTEM-PRESSURE SW
31B	WIPER & WASHER SYSTEM
32	EXTERIOR LTS-BACK-UP
32A	BACK-UP MONITOR
32B	EXTERIOR LTS-BACK-UP
32D	BACK-UP ALARM
32M	BACK-UP MONITOR
34	A/C & HEAT SYSTEM-CONDENSER
34A	A/C & HEAT SYSTEM-CONDENSER
35	INTERIOR LTS-STEPWELL LTS
36	ENGINE BRAKE SYSTEM & RETARDER
36A	ENGINE BRAKE SYSTEM
36C	ENGINE BRAKE SYSTEM-ABS CANCEL
37	LAVATORY-OCCUPIED LTS
38	FUEL WATER FILTER
38	INTERIOR LTS-24V FLUORESCENT
38A	INTERIOR LTS-24V FLUORESCENT
38B	INTERIOR LTS-24V FLUORESCENT
38C	INTERIOR LTS-24V FLUORESCENT
38E	INTERIOR LTS-24V FLUORESCENT
38F	INTERIOR LTS-24V FLUORESCENT
39	INTERIOR LTS-DRIVER'S LTS
39A	INTERIOR LTS-DRIVER'S LTS

CIRCUIT NUMBER CODE — Page E : 1

No.	SYSTEM
39B	INTERIOR LTS-DRIVER'S LTS
44	EXTERIOR LTS-FOG
44A	EXTERIOR LTS-FOG
44B	EXTERIOR LTS-FOG
44C	EXTERIOR LTS-FOG & HAZARD SW
45	A/C & HEAT SYSTEM-DRIVER'S CTRL
45	A/C & HEAT SYSTEM-WATER VALVE
45A	A/C & HEAT SYSTEM-WATER VALVE
45B	A/C & HEAT SYSTEM-WATER VALVE
45E	A/C & HEAT SYSTEM-BYPASS VALVE
46	EXTERIOR LTS-MARKER
46A	EXTERIOR LTS-MARKER
46B	EXTERIOR LTS-MARKER
46C	EXTERIOR LTS-MARKER
47	A/C & HEAT SYSTEM-DRIVER'S HTR
47	A/C & HEAT SYSTEM-FULL AIR
48	INTERIOR LTS-STEPWELL LTS
50	AIR DRYER
51	INTERIOR LTS-READING LTS
52	ALARM & SIGNAL-ELEC.HORN
52A	ALARM & SIGNAL-ELEC.HORN
53	ALARM & SIGNAL-ELEC.HORN
53B	WIPER & WASHER SYSTEM
53C	WIPER & WASHER SYSTEM
53E	WIPER & WASHER SYSTEM
53F	WIPER & WASHER SYSTEM
53J	WIPER & WASHER SYSTEM
54	SPARE-F.J.B. TO FR ROOF
55	EXTERIOR LTS-HI.BEAM
56	TRANSM. OIL TEMP GAUGE
57	EXTERIOR LTS-HI.BEAM
57	A/C & HEAT SYSTEM-WATER PUMP
57A	EXTERIOR LTS-HI.BEAM
57A	A/C & HEAT SYSTEM-WATER PUMP
57B	A/C & HEAT SYSTEM-WATER PUMP
57C	PRE-HEAT WATER HEATER
57D	PRE-HEAT WATER HEATER
57E	PRE-HEAT WTR HTR PUMP
57F	PRE-HEAT WATER HEATER
57W	PRE-HEAT WATER HEATER
58	EXTERIOR LTS-LO BEAM
58A	EXTERIOR LTS-LO BEAM
58B	EXTERIOR LTS-LO BEAM
58E	EXTERIOR LTS-LO BEAM
59A	ENGINE BRAKE SYSTEM
60	EXTERIOR LTS-RR & FR ROOF GRD
61	EXTERIOR LTS-FR FEED SW
61A	EXTERIOR LTS-HEAD SIGNAL
62	LAVATORY-OCCUPIED LTS
62B	LAVATORY-OCCUPIED LTS
63	EXTERIOR LTS-CLEARANCE
63A	EXTERIOR LTS-CLEARANCE
63B	EXTERIOR LTS-CLEARANCE
63C	EXTERIOR LTS-MARKER SIGNAL
63D	EXTERIOR LTS-MARKER & TAIL
63E	EXTERIOR LTS-CLEARANCE
63F	EXTERIOR LTS-MARKER BLINKER
63H	EXTERIOR LTS-TAIL
63K	EXTERIOR LTS-TAIL
64	DIFFERENTIAL OIL TEMP GAUGE

CIRCUIT NUMBER CODE — Page E : 2

No.	SYSTEM
65A	PRE-HEAT WATER HEATER
66B	RR JCT BOX 12V HOT WIRE
67	A/C & HEAT SYSTEM
67A	A/C & HEAT SYSTEM
67B	A/C & HEAT SYSTEM
67C	A/C & HEAT SYSTEM
69	RR JCT BOX 24V HOT WIRE
70	INTERIOR LTS-HAT RACK LTS
70A	INTERIOR LTS-HAT RACK LTS
70C	INTERIOR LTS-HAT RACK LTS
71	A/C AUXILIARY-DASH SW
71B	R J B GRD-BACK UP ALARM
71H	A/C AUXILIARY-DASH SW
72	A/C AUXILIARY-DASH SW
72H	A/C AUXILIARY-DASH SW
73	LAVATORY-WASTE LTS
74	INTERIOR LTS-READING LTS
74A	INTERIOR LTS-READING LTS
74B	INTERIOR LTS-READING LTS
75	INTERIOR LTS-READING LTS
76	FUEL TANK GAUGE
76A	LOW FUEL LT
76B	LOW FUEL LT
76C	LOW FUEL LT
76D	LOW FUEL LT
76L	LOW FUEL LT
76M	FUEL PRIME PUMP
76P	FUEL PRIME PUMP
77H	A/C & HEAT SYSTEM-CLUTCH
77B	A/C AUXILIARY-LIQ.SOL.
77C	A/C AUXILIARY-LIQ.SOL.
77H	A/C & HEAT SYSTEM-FAN CLUTCH
78	24V HOT WIRE
78A	24V HOT WIRE
80	WORLD TRANSM-NEUTRAL SIGNAL GRD
81	EXTERIOR LTS-STOP SW
82	EXTERIOR LTS-STOP SIGNAL
82A	EXTERIOR LTS-STOP SIGNAL
82B	EXTERIOR LTS-STOP LTS
82K	EXTERIOR LTS-STOP RETARDER
82L	EXTERIOR LTS-STOP LTS
82R	EXTERIOR LTS-STOP LTS
83	ENGINE CTR-MAST KEY SW ACCES
84	ENGINE CTR-MAST KEY SW START
84A	ENGINE CTR-MAST KEY SW START
85	ENGINE CTR-MAST KEY SW IGN
85A	24V IGN DASH INSTRUMENTATION
85B	24V IGN DASH INSTRUMENTATION
85BE	BATTERY MONITOR 24V IGN
85C	ENGINE CTR-24V IGNITION
85D	PARKING BRAKE SWITCH
85F	LO AIR SONALERT
85W	ABS-24V IGN
85X	ABS-24V IGN
85Y	ABS-WARNING LT
86	ENGINE CTR-STARTER SOL SIGN
86A	ENGINE CTR-STARTER SOL SIGN
87B	ENGINE CTR-24V IGNITION
88	ENGINE CTR-RR START SIGNAL
89	ENGINE CTR-RR START SIGNAL
90	A/C & HEAT SYSTEM-WATER PUMP

CIRCUIT NUMBER CODE — Page E : 2

No.	SYSTEM
90	GALLEY SYSTEM
90	DIGITAL CLOCK
90A	GALLEY SYSTEM
90B	ENGINE CTR-MAST KEY SW FEED
90B	GALLEY SYSTEM
90B	FR JCT PANEL 24V DISC SW
90C	ALARM & SIGNAL-FIRE DETECTOR
90E	GALLEY SYSTEM
90F	GALLEY SYSTEM
91	PARKING BRAKE SW SIGNAL
91A	PARKING BRAKE SW SIGNAL
91B	DDEC III-FAST IDLE SIGNAL
91B	EXTERIOR LTS-RUN LTS CANCEL
91C	PRE-HEAT WATER HEATER
92	BATTERY MONITOR-CHECK BALANCE
92A	BATTERY MONITOR-CHECK BALANCE
93	BATTERY MONITOR-CHECK LO/HI
93A	BATTERY MONITOR-CHECK LO/HI
94	HIGH BUOY SYSTEM
94A	HIGH BUOY SYSTEM
95	ENGINE BRAKE & RETARDER SYSTEM
95A	ENGINE BRAKE & RETARDER SYSTEM
95B	ENGINE BRAKE & RETARDER SYSTEM
97	TACHOMETER (-)
99	A/C AUXILIARY-DASH SW
100	INTERIOR LTS-GENERAL LTS
100A	INTERIOR LTS-GENERAL LTS
100B	INTERIOR LTS-GENERAL LTS
100C	INTERIOR LTS-GENERAL LTS
101	WORLD TRANSM-LO SIGNAL SOL. LO
101A	24V DISC SW TO BATTERY
102	24V STARTER TO GENERATOR
102	WORLD TRANSM-SOL. GRD 1
102	WORLD TRANSM-SOL. C3
104	WORLD TRANSM-SOL. FORWARD
105	WORLD TRANSM-RETARDER & SUMP
105W	WORLD TRANSM-RETARDER & SUMP
106	WORLD TRANSM-OIL LEVEL HI
107	CHARG SYST-VOLTAGE REGUL. "F"
107	WORLD TRANSM-LOCKUP SOL. HI
108	WORLD TRANSM-REMOTE PWR WAKE UP
108	24V DISC SW TO 24V SYSTEM
108A	CHARG SYST-VOLTAGE REGUL. "B"
109	WORLD TRANSM-RET. SOL. LO
110	ALARM & SIGNAL-WATER TEMP
110	WORLD TRANSM-LOCKUP SOL. LO
111	BATTERY GRD
111	WORLD TRANSM-SOL. C6
112	WORLD TRANSM-SPARE OUTPUT (+)
113	ALARM & SIGNAL-OIL PRESS
113	WORLD TRANSM-RETARDER WARNING
114	WORLD TRANSM-SPARE OUTPUT (-)
114	INTERIOR LTS-DASH LT REGUL.
114A	INTERIOR LTS-DASH LT
114B	INTERIOR LTS-DASH LT REGUL.
114C	INTERIOR LTS-DASH LT
115	ALARM & SIGNAL-TAG PRESS
115	DDEC III-COOLANT LEVEL
115A	ALARM & SIGNAL-TAG PRESS

CIRCUIT NUMBER CODE — Page E : 2

No.	SYSTEM
115B	ALARM & SIGNAL-TAG PRESS
115C	DDEC III-COOLANT LEVEL
115W	WORLD TRANSM-DO NOT SHIFT SIGNAL
116	WORLD TRANSM-LO SIGNAL SOL. HI
116	A/C & HEAT SYSTEM-DRIVER'S HTR
116A	A/C & HEAT SYSTEM-DRIVER'S HTR
116B	A/C & HEAT SYSTEM-DRIVER'S HTR
117	WORLD TRANSM-SPARE INPUT (-)
117	ALARM & SIGNAL-TRANSM OIL TEMP
117A	ALARM & SIGNAL-TRANSM OIL TEMP
118	WORLD TRANSM-SPARE INPUT (+)
119	WORLD TRANSM-ENG BRK INPUT (-)
119A	CHME-HOSTESS & PASSENGER
119B	CHME-HOSTESS & PASSENGER
120	12V HOT WIRE
120	WORLD TRANSM-SOL. C1
120D	12V HOT WIRE
120I	VIDEO SYSTEM
120Z	VIDEO SYSTEM
121	WORLD TRANSM-SOL. GRD 2
121	CIGAR LIGHTER
122	A/C & HEAT SYSTEM-DRIVER'S HTR
122	A/C & HEAT SYSTEM-FRESH AIR
122	WORLD TRANSM-SOL. GRD 4
123	WORLD TRANSM-NEUTRAL START
123	ALARM & SIGNAL-FIRE DETECTOR
123A	ALARM & SIGNAL-FIRE DETECTOR
124	WORLD TRANSM-THROTTLE (HI)
125	LAVATORY-FAN
125	WORLD TRANSM-RETARDER INDICATOR
125W	WORLD TRANSM-RETARDER INDICATOR
126	WORLD TRANSM-LUBE PRESS SW.
126	KNEELING SYSTEM
126A	KNEELING SYSTEM
126B	KNEELING SYSTEM
126C	KNEELING SYSTEM
126G	KNEELING SYSTEM
126H	KNEELING SYSTEM
127	WORLD TRANSM-RETARDER FEED SOL.
127	PRE-HEAT WATER HEATER
127A	PRE-HEAT WATER HEATER
127B	PRE-HEAT WATER HEATER
127W	PRE-HEAT WATER HEATER
127X	PRE-HEAT WATER HEATER
128	WORLD TRANSM-SOL. C2
128A	PRE-HEAT WATER HEATER
128B	PRE-HEAT WATER HEATER
128C	PRE-HEAT WATER HEATER
128D	PRE-HEAT WATER HEATER
128E	PRE-HEAT WATER HEATER
128F	PRE-HEAT WATER HEATER
128W	PRE-HEAT WATER HEATER
128X	PRE-HEAT WATER HEATER
129	WORLD TRANSM-SOL. C5
129	PRE-HEAT WATER HEATER
129A	PRE-HEAT WATER HEATER
129B	PRE-HEAT WATER HEATER
130	WORLD TRANSM-SOL. GRD 3
130A	A/C & HEAT SYSTEM-EVAPORATOR
130A	A/C & HEAT SYSTEM-EVAPORATOR

CIRCUIT NUMBER CODE — Page E : 2

No.	SYSTEM
131	24V DISC SW TO FR JCT PANEL
131	WORLD TRANSM-SOL. C4
132	WORLD TRANSM-ENG BRK OUTPUT (-)
132W	WORLD TRANSM-ENG BRK OUTPUT (-)
133	WORLD TRANSM-RET. ACTUATOR HI
133	GALLEY SYSTEM-CONTAINER RH
133A	GALLEY SYSTEM-CONTAINER RH
134	WORLD TRANSM-RET. APPLY SOL. HI
134A	GALLEY SYSTEM-CONTAINER RH
135	WORLD TRANSM-ANALOG GRD
135	A/C AUXILIARY-FAN
135A	A/C AUXILIARY-FAN
135B	A/C AUXILIARY-COIL SENSING
135C	WORLD TRANSM-RETARDER TEMP
135D	WORLD TRANSM-RETARDER RES MOD
136	GALLEY SYSTEM-LAMP
136	WORLD TRANSM-ECU POWER
136V	WORLD TRANSM-12V BATTERY
136W	WORLD TRANSM-12V BATTERY
136X	WORLD TRANSM-12V BATTERY
137	WORLD TRANSM-RETARDER
137	RR VIEW MIRROR
137A	RR VIEW MIRROR
138	WORLD TRANSM-RETARDER TEMP
138	ABS SYSTEM
138A	A/C AUXILIARY-FAN
138A	ABS SYSTEM
139	ABS SYSTEM
139	A/C AUXILIARY-FAN
139	WORLD TRANSM-OUTPUT SPEED HI
139A	A/C AUXILIARY-FAN
140	A/C AUXILIARY-SHUTTER
140	WORLD TRANSM-OUTPUT SPEED LO
140	ABS SYSTEM
141	ABS SYSTEM
141	WORLD TRANSM-ENGINE SPEED HI
142	WORLD TRANSM-SERIAL COM. A
142	ABS SYSTEM
143	ABS SYSTEM
143A	ABS SYSTEM
143	WORLD TRANSM-ECU BATTERY GRD
143W	WORLD TRANSM-BATTERY GRD
143X	WORLD TRANSM-BATTERY GRD
144	WORLD TRANSM-ECU CHASSIS GRD
144	ABS SYSTEM
144A	ABS SYSTEM
145	ABS SYSTEM
146	ABS SYSTEM
146	WORLD TRANSM-IGNITION SENSE
146W	WORLD TRANSM-12V IGNITION
146X	WORLD TRANSM-12V IGNITION
147	WORLD TRANSM-OIL TEMP
147	ABS SYSTEM
147	ETHER COLD START
147A	ETHER COLD START
148	ABS SYSTEM
148	WORLD TRANSM-OUTPUT SPEED LO
149	WORLD TRANSM-TURBINE SPED HI

CIRCUIT NUMBER CODE — Page E : 3

No.	SYSTEM
149	ABS SYSTEM
149A	ABS SYSTEM
150	ABS SYSTEM-SPARE
150	WORLD TRANSM-ENGINE SPEED LO
150	DDEC III-ECM BATTERY GRD
150A	DDEC III-ECM BATTERY GRD
151	DDEC III-ECM BATTERY GRD
151	WORLD TRANSM-SERIAL COM. B
151	ABS SYSTEM-SPARE
152	ABS SYSTEM-SPARE
153	ABS SYSTEM
153	WORLD TRANSM-SPARE INPUT (-)
154	WORLD TRANSM-ABS RETARDER INPUT
155	WORLD TRANSM-SPARE INPUT (-)
155	ABS SYSTEM
156	WORLD TRANSM-THROTTLE POS.
156	ABS SYSTEM
156A	ABS SYSTEM
156C	ABS SYSTEM
156W	ABS SYSTEM
157	WORLD TRANSM-SPEEDOMETER SIGNAL
157	ABS SYSTEM
157A	ABS SYSTEM
157B	ABS SYSTEM
157C	ABS SYST.-CANCEL SEC. BRK
158	WORLD TRANSM-DIMMER
160	WORLD TRANSM-CRUISE STOP SW CUT IN
161	WORLD TRANSM-SIGNAL GRD
161B	WORLD TRANSM-SIGNAL GRD
162	WORLD TRANSM-PRESS. SW C3
163	WORLD TRANSM-RETARDER ENABLE
164	WORLD TRANSM-RET. ACTUATOR SIGN
165	WORLD TRANSM-OIL LEVEL SIGNAL
168	WORLD TRANSM-SER. INTERFACE (+)
170C	LUGGAGE DOOR LOCK
170D	LUGGAGE DOOR LOCK
170E	LUGGAGE DOOR LOCK
170F	LUGGAGE DOOR LOCK
170G	LUGGAGE DOOR LOCK
170H	LUGGAGE DOOR LOCK
170J	LUGGAGE DOOR LOCK
170L	LUGGAGE DOOR LOCK
170M	LUGGAGE DOOR LOCK
170N	LUGGAGE DOOR LOCK
170P	LUGGAGE DOOR LOCK
170R	LUGGAGE DOOR LOCK
170S	LUGGAGE DOOR LOCK
170V	LUGGAGE DOOR LOCK
170W	LUGGAGE DOOR LOCK
170X	LUGGAGE DOOR LOCK
170Y	LUGGAGE DOOR LOCK
170Z	LUGGAGE DOOR LOCK
182	PYROMETER
182A	PYROMETER
197A	FUEL WATER FILTER
197B	FUEL WATER FILTER
201	WORLD TRANSM-SPARE
202	WORLD TRANSM-SPARE
203	WORLD TRANSM-SPARE
204	WORLD TRANSM-SPARE

CIRCUIT NUMBER CODE — Page E : 3

No.	SYSTEM
205	WORLD TRANSM-SPARE
206	WORLD TRANSM-SPARE
214	WORLD TRANSM-BACK UP SIGNAL
214A	BACK UP SIGNAL
214B	BACK UP SIGNAL
231	NEUTRAL SIGNAL GRD
240	DDEC III-ECM 12V FEEDING
241	DDEC III-ECM 12V FEEDING
251	PRODRIVER-12V HOT WIRE
290	FAN CLUTCH RADIATOR
291	FAN CLUTCH RADIATOR SPD 1
292	FAN CLUTCH RADIATOR SPD 2
417	DDEC III-LMT SPEED GOVERNOR
419	DDEC III-CHECK ENGINE LIGHT
439	DDEC III-12V IGNITION
440	DDEC III-12V IGNITION
440A	DDEC III-12V IGNITION
451	DDEC III-A/C FAN CLUTCH
505	DDEC III-TACHOMETER DRIVE
509	DDEC III-STOP ENGINE LIGHT
510	DDEC III-FAST IDLE SIGNAL
524	DDEC III-ENGINE BRAKE DISABLE
525	DDEC III-FAST IDLE SIGNAL
528	DDEC III-STOP ENG. OVERRIDE
531	DDEC III-CRUISE CLUTCH RELEASE
541	DDEC III-CRUISE SET SW
543	DDEC III-CRUISE STOP SW CUT IN
544	DDEC III-CRUISE ON/OFF SW
545	DDEC III-CRUISE RESUME SW
555	DDEC III-FAN CLUTCH SPEED+ 1
556	DDEC III-VEHICLE SPEED (+)
557	DDEC III-VEHICLE SPEED (-) 1
563	DDEC III-FAN CLUTCH SPEED+ 2
583	DDEC III-ENGINE BRAKE 4 CYL.
750	PRODRIVER-ILLUMINATION LIGHT
900	DDEC III-DATA LINK (+)
901	DDEC III-DATA LINK (-)
908	DDEC III-HYDRAULIC TRANSM. MODUL.
916	DDEC III-SENSOR SUPPLY (5VDC)
952	DDEC III-SENSOR RETURN
953	DDEC III-BATTERY GRD
953C	DDEC III-BATTERY GRD
979	DDEC III-ENGINE BRAKE 2 CYL.
A	A/C & HEAT SYSTEM-HI PRES.
A1	A/C & HEAT SYSTEM-LO PRES.
A4	A/C & HEAT SYSTEM-CONTROL SW
A5	A/C & HEAT SYSTEM-CONTROL SW
A6	A/C & HEAT SYSTEM-CONTROL SW
L1	VIDEO SYSTEM- 110V
L1	INTERIOR LTS-110V FLUORESCENT
L1A	INTERIOR LTS-110V FLUORESCENT
L1C	INTERIOR LTS-110V FLUORESCENT
L2A	INTERIOR LTS-110V FLUORESCENT
L2C	INTERIOR LTS-110V FLUORESCENT
L8	ENG.BLK & WATER TANK-HEATER
L9	ENG.BLK & WATER TANK-HEATER

CIRCUIT NUMBER CODE — Page E : 3

No.	SYSTEM
N1	VIDEO SYSTEM- 110V
N2	INTERIOR LTS-110V FLUORESCENT
J4	A/C & HEAT SYSTEM-DRIVER'S HTR
Q3	A/C & HEAT SYSTEM-DRIVER'S HTR
R1	A/C & HEAT SYSTEM-DRIVER'S HTR
R6	A/C & HEAT SYSTEM-DRIVER'S HTR
SH1	SHIELD WIRE GRD
SH2	SHIELD WIRE GRD
SH3	SHIELD WIRE GRD
V5	A/C & HEAT SYSTEM-DRIVER'S HTR
V7	A/C & HEAT SYSTEM-DRIVER'S HTR

CIRCUIT NUMBER CODE — PAGE: 1

NO.	SYSTEM
0	GRD BATTERY A TO GRD STUD
0	GRD BATTERY A1 TO GRD STUD
0	GRD STARTER MOTOR TO GRD STUD
0	FJP - GRD
0	RJB - GRD
0	BJP - GRD
0A	RJB - GRD
0A	FR SERV JCT BOX - GRD
0B	FJP - GRD
0B	RJB - GRD
0BE	BV BATTERY MONITOR
0C	RJB - GRD
0D	FJP - GRD
0D	RJB - GRD
0E	RJB - GRD
0F	RJB - GRD
0H	FJP - GRD
0H	BACK-UP MONITOR
0P	RJB - GRD
0P	RJB - SOUND SYSTEM GRD
0S2	RADIO- BATTERY GRD
0S3	VIDEO- BATTERY GRD
0S5	SOUND SYSTEM - BATTERY GRD
0S5S	SOUND SYSTEM - BATTERY GRD
0T	FJP - GRD
0T	FR SERVICE CPT-GRD
0V	FJP - GRD
0VA	GRD STUD TO BAT.EQUALIZER
0W	FJP - GRD
0W	WORLD TRANSM. VIM CHASSIS GRD
0WA	PRE_HEAT WATER HEATER WEBASTO
0WB	PRE_HEAT WATER HEATER WEBASTO
0X	RJB - GRD
0Y1	ABS SYSTEM-GRD
0Y1	ABS SYSTEM-GRD
2	A/C & HEAT SYSTEM-CONSENSER
2A	A/C & HEAT SYSTEM-CONSENSER
2C	A/C & HEAT SYSTEM-CONSENSER
2D	A/C & HEAT SYSTEM-CONSENSER
3	A/C & HEAT SYSTEM-EVAPORATOR
3A	A/C & HEAT SYSTEM-EVAPORATOR
3B	A/C & HEAT SYSTEM-EVAPORATOR
4	CH|ME-PASSENGER & HOSTESS
4B	CH|ME-PASSENGER & HOSTESS
4B	CH|ME-PASSENGER & HOSTESS
4D	CH|ME-PASSENGER & HOSTESS
4E	CH|ME-PASSENGER & HOSTESS
5	INTERIOR LTS-EMERGENCY EXIT LTS
5A	INTERIOR LTS-EMERGENCY EXIT LTS
5B	INTERIOR LTS-EMERGENCY EXIT LTS
6	INTERIOR LTS-AISLE LTS
7	INTERIOR LTS-STEPWELL LTS
8A	INTERIOR LTS-AISLE & EMERG. LTS
8B	INTERIOR LTS-AISLE & EMERG. LTS
9	INTERIOR LTS-ENGINE CPT
9	INTERIOR LTS-RR JCT BOX
9A	INTERIOR LTS-FR SERVICE CPT
9A	INTERIOR LTS-FR JCT PANEL
9E	CH|ME-PASSENGER & HOSTESS
10	A/C & HEAT SYSTEM-LO PRES.

NO.	SYSTEM
10	INTERIOR LTS-LUGGAGE CPT
10A	INTERIOR LTS-LUGGAGE CPT
10A	A/C AUXILIARY-CLUTCH
10B	INTERIOR LTS-LUGGAGE CPT
10C	INTERIOR LTS-LUGGAGE CPT
11	FR.DESTINATION SIGN
11A	FR.DESTINATION SIGN
11B	FR.DESTINATION SIGN
11C	FR.DESTINATION SIGN
11D	FR.DESTINATION SIGN
11E	FR.DESTINATION SIGN
11F	FR.DESTINATION SIGN
11K	FR.DESTINATION SIGN
11P	FR.DESTINATION SIGN
12	12V BATTERY A1 TO BATTERY A
12A	12V BATTERY B1 TO BATTERY B
12B	12V BATTERY B1 TO BATTERY B
12C	12V VIDEO SYSTEM
12D	FR JCT PANEL 24V DISC SW
12E	RR JCT BOX 12V DISC SW
12F	FR JCT PANEL 12V DISC SW
12G	RR JCT BOX 12V DISC SW
12H	FR JCT PANEL 12V DISC SW
12I	RR JCT BOX 12V DISC SW
12J	FR JCT PANEL 12V DISC SW
12K	RR JCT BOX 12V DISC SW
12L	FR JCT PANEL 12V DISC SW
12M	RR JCT BOX 12V DISC SW
12N	FR JCT PANEL 12V DISC SW
12O	RR JCT BOX 12V DISC SW
12P	FR JCT PANEL 12V DISC SW
12P	FR JCT PANEL 12V DISC SW
12Q	12V BATTERY-SOUND SYSTEM RADIO
12R	12V BATTERY-SOUND SYSTEM RADIO
12S	12V BATTERY-SOUND SYSTEM RADIO
12S2	12V BATTERY-SOUND SYSTEM RADIO
12SB	12V BATTERY-SOUND SYSTEM
12SS	12V BATTERY-SOUND SYSTEM
12T	RR JCT BOX 12V DISC SW
12VA	12V BATTERY POST TO EQUALIZER
12V	12V FR JCT PANEL
12W	RR JCT BOX 12V IGNITION
12VR	RR JCT BOX 12V DISC SW
12W	12V HOT WIRE DOOR ILL FEED
13A	ALARM & SIGNAL-LO AIR PRIM.
13B	ALARM & SIGNAL-LO AIR SEC.
14	LAVATORY-FLUSHING SW
15	EXTERIOR LTS-MULTI FUNC LEVEL
31A	A/C & HEAT SYSTEM-PRESSURE SW
31B	A/C & HEAT SYSTEM-PRESSURE SW
31B	WIPER & WASHER SYSTEM
31B	SPEEDOMETER SIGNAL (+)
32A	BACK-UP MONITOR
32B	EXTERIOR LTS-FLASHER UNIT
32D	BACK-UP ALARM
32M	BACK-UP MONITOR
34	A/C & HEAT SYSTEM-CONDENSER
34A	A/C & HEAT SYSTEM-CONDENSER
35	INTERIOR LTS-STEPWELL LTS
36	ENGINE BRAKE SYSTEM & RETARDER
36A	ENGINE BRAKE SYSTEM
36C	ENGINE BRAKE SYSTEM-ABS CANCEL
37	LAVATORY-OCCUPIED LTS
38	FUEL WATER FILTER

NO.	SYSTEM
23B	EXTERIOR LTS-DIRECTIONAL RH
23E	KNEELING-RH EXT. FLASHING LTS
23F	KNEELING-RH EXT. FLASHING LTS
23H	EXTERIOR LTS-HAZARD SIGNAL
24	BATTERY B TO BATTERY B1
24	BOOSTER TO 24V DISC SW
24A	RR JCT BOX 24V DISC SW
24A	FR JCT PANEL 24V DISC SW
24B	FR JCT PANEL 24V DISC SW
24BE	BATTERY MONITOR
24C	FR JCT PANEL 24V DISC SW
24F	FR JCT PANEL 24V DISC SW
24I	FR JCT PANEL 24V IGNITION
24J	RR JCT BOX 24V IGNITION
24K	FR JCT PANEL 24V IGNITION
24L	FR JCT PANEL 24V IGNITION
24M	FR JCT PANEL 24V DISC SW
24N	FR JCT PANEL 24V DISC SW
24O	RR JCT BOX 24V DISC SW
24P	RR JCT BOX 24V DISC SW
24R	RR JCT BOX 24V DISC SW
24S	RR JCT BOX 24V DISC SW
24S2	24V BATTERY-SOUND SYSTEM
24S3	24V BATTERY-SOUND SYSTEM VIDEO
24S4	24V BATTERY-SOUND SYSTEM VIDEO
24SB	24V BATTERY-SOUND SYSTEM
24SS	24V BATTERY-SOUND SYSTEM
24T	RR JCT BOX 24V DISC SW
24VA	24V BATTERY POST TO EQUALIZER
24VI	RR JCT BOX 24V IGNITION
24VIF	FR JCT PANEL 24V IGNITION
24VD	FR JCT PANEL 24V HOT WIRE
24VE	RR JCTY BOX 24V HOT WIRE
24VF	FR JCT PANEL 24V DISC SW
25	24V SPEED SW & KNEELING
25	12VAC GEN RLY ON SIGNAL
25A	NOT GENERATOR-WARNING LT
26B	EXTERIOR LTS-DIRECTIONAL LTS
25L	12VAC GEN RLY ON SIGNAL
27	LAVATORY-EMERGENCY BUZZER
28	A/C & HEAT SYSTEM-WARNING LT
29	A/C & HEAT SYSTEM-DRIVER'S CTRL
29A	A/C & HEAT SYSTEM-DRIVER'S HTR
29B	A/C & HEAT SYSTEM-DRIVER'S HTR
30	GALLEY SYSTEM
30A	GALLEY SYSTEM
31A	A/C & HEAT SYSTEM-PRESSURE SW
31B	A/C & HEAT SYSTEM-PRESSURE SW
31B	WIPER & WASHER SYSTEM
32	EXTERIOR LTS-BACK-UP
32A	BACK-UP MONITOR
32B	EXTERIOR LTS-BACK-UP
32D	BACK-UP ALARM
32M	BACK-UP MONITOR
34	A/C & HEAT SYSTEM-CONDENSER
34A	A/C & HEAT SYSTEM-CONDENSER
35	INTERIOR LTS-STEPWELL LTS
36	ENGINE BRAKE SYSTEM & RETARDER
36A	ENGINE BRAKE SYSTEM
36C	ENGINE BRAKE SYSTEM-ABS CANCEL
37	LAVATORY-OCCUPIED LTS
38	FUEL WATER FILTER

NO.	SYSTEM
38	INTERIOR LTS-24V FLUORESCENT
38A	INTERIOR LTS-24V FLUORESCENT
38B	INTERIOR LTS-24V FLUORESCENT
38C	INTERIOR LTS-24V FLUORESCENT
38E	INTERIOR LTS-24V FLUORESCENT
38F	INTERIOR LTS-24V FLUORESCENT
39	INTERIOR LTS-DRIVER'S LTS
39A	INTERIOR LTS-DRIVER'S LTS
39B	INTERIOR LTS-DRIVER'S LTS
44	EXTERIOR LTS-FOG
44A	EXTERIOR LTS-FOG
44B	EXTERIOR LTS-FOG
44C	EXTERIOR LTS-FOG & HAZARD SW
45	A/C & HEAT SYSTEM-DRIVER'S CTRL
45A	A/C & HEAT SYSTEM-WATER VALVE
45A	A/C & HEAT SYSTEM-WATER VALVE
45B	A/C & HEAT SYSTEM-WATER VALVE
45E	A/C & HEAT SYSTEM-BYPASS VALVE
46	EXTERIOR LTS-MARKER
46A	EXTERIOR LTS-MARKER
46B	EXTERIOR LTS-MARKER
46C	EXTERIOR LTS-MARKER
47	A/C & HEAT SYSTEM-DRIVER'S HTR
47	A/C & HEAT SYSTEM-FULL AIR
48	INTERIOR LTS-STEPWELL LTS
51	INTERIOR LTS-READING LTS
52	ALARM & SIGNAL-ELEC. HORN
52A	ALARM & SIGNAL-ELEC. HORN
53	ALARM & SIGNAL-ELEC. HORN
53B	WIPER & WASHER SYSTEM
53C	WIPER & WASHER SYSTEM
53E	WIPER & WASHER SYSTEM
53F	WIPER & WASHER SYSTEM
53J	WIPER & WASHER SYSTEM
54	SPARE-F,J,B, TO FR ROOF
55	EXTERIOR LTS-HI BEAM
56	WORLD TRANSM-OIL TEMP GAUGE
57	EXTERIOR LTS-HI BEAM
57A	A/C & HEAT SYSTEM-WATER PUMP
57B	A/C & HEAT SYSTEM-WATER PUMP
57C	PRE-HEAT WATER HEATER
57D	PRE-HEAT WATER HEATER
57E	PRE-HEAT WTR HTR PUMP
57F	PRE-HEAT WATER HEATER
57G	PRE-HEAT WATER HEATER
58	EXTERIOR LTS-LO BEAM
58A	EXTERIOR LTS-LO BEAM
58B	EXTERIOR LTS-LO BEAM
58E	EXTERIOR LTS-LO BEAM
59A	ENGINE BRAKE SYSTEM
60	EXTERIOR LTS-FR ROOF GRD
61	EXTERIOR LTS-24V FEED SW
61A	EXTERIOR LTS-HEAD SIGNAL
62	LAVATORY-OCCUPIED LTS
62B	LAVATORY-OCCUPIED LTS
63	EXTERIOR LTS-CLEARANCE
63A	EXTERIOR LTS-CLEARANCE
63B	EXTERIOR LTS-CLEARANCE

CIRCUIT NUMBER CODE — PAGE: 2

NO.	SYSTEM
63C	EXTERIOR LTS-MARKER SIGNAL
63D	EXTERIOR LTS-MARKER & TAIL
63E	EXTERIOR LTS-CLEARANCE
63F	EXTERIOR LTS-MARKER BLINKER
63G	EXTERIOR LTS-TAIL
63K	EXTERIOR LTS-TAIL
64	DIFFERENTIAL OIL TEMP GAUGE
65A	PRE-HEAT WATER HEATER
66B	RR JCT BOX 12V HOT WIRE
67	A/C & HEAT SYSTEM
67A	A/C & HEAT SYSTEM
67B	A/C & HEAT SYSTEM
67C	A/C & HEAT SYSTEM
69	RR JCT BOX 24V HOT WIRE
70	INTERIOR LTS-READING LTS
70A	INTERIOR LTS-HAT RACK LTS
70B	INTERIOR LTS-HAT RACK LTS
71	A/C AUXILIARY-DASH SW
71B	A/ B -ORD-BACK UP ALARM
71B	A/C AUXILIARY-DASH SW
72	A/C AUXILIARY-DASH SW
72H	A/C AUXILIARY-DASH SW
73	LAVATORY-NIGHT LTS
74	INTERIOR LTS-READING LTS
74A	INTERIOR LTS-READING LTS
74B	INTERIOR LTS-READING LTS
75	INTERIOR LTS-READING LTS
76	FUEL TANK GAUGE
76A	LOW FUEL LT
76B	LOW FUEL LT
76C	LOW FUEL LT
76D	LOW FUEL LT
76L	LOW FUEL LT
76M	FUEL PRIME PUMP
76P	FUEL PRIME PUMP
77H	A/C & HEAT SYSTEM-CLUTCH
77B	A/C AUXILIARY-LIQ. SOL.
77C	A/C AUXILIARY-LIQ. SOL.
77H	A/C & HEAT SYSTEM-FAN CLUTCH
77E	24V HOT WIRE
78A	24V HOT WIRE
80	WORLD TRANSM-NEUTRAL SIGNAL GRD
81	EXTERIOR LTS-STOP SW
82	EXTERIOR LTS-STOP SIGNAL
82A	EXTERIOR LTS-STOP SIGNAL
82B	EXTERIOR LTS-STOP LTS
82K	EXTERIOR LTS-STOP RETARDER
82L	EXTERIOR LTS-STOP LTS
82R	EXTERIOR LTS-STOP LTS
83	ENGINE CTR-MAST KEY SW ACCES
84	ENGINE CTR-MAST KEY SW START
84A	ENGINE CTR-MAST KEY SW START
85	ENGINE CTR-MAST KEY SW IGN
85A	24V IGN DASH INSTRUMENTATION
85B	24V IGN DASH INSTRUMENTATION
85BE	BATTERY MONITOR 24V IGN
85C	ENGINE CTR-24V IGNITION
85C	PARKING BRAKE SWITCH
85F	LO AIR SONALERT
85W	ABS-24V IGN
85X	ABS-24V IGN

NO.	SYSTEM
85Y	ABS-WARNING LT
86	ENGINE CTR-STARTER SOL SIGN
86A	ENGINE CTR-STARTER SOL SIGN
87B	ENGINE CTR-24V IGNITION
88	ENGINE CTR-RR START SIGNAL
89	A/C & HEAT SYSTEM-WATER PUMP
90	GALLEY SYSTEM
90	DIGITAL CLOCK
90A	GALLEY SYSTEM
90B	ENGINE CTR-MAST KEY SW FEED
90C	GALLEY SYSTEM
90D	FR JCT PANEL 24V DISC SW
90E	ALARM & SIGNAL-FIRE DETECTOR
90F	GALLEY SYSTEM
90G	PARKING BRAKE SW SIGNAL
91	CH|ME-HOSTESS & PASSENGER
91A	DDEC III-FAST IDLE SIGNAL
91B	EXTERIOR LTS-DIR.SIG LTS CANCEL
91C	PRE-HEAT WATER HEATER
92	BATTERY MONITOR-CHECK BALANCE
92A	BATTERY MONITOR-CHECK BALANCE
93	BATTERY MONITOR-CHECK LO/HI
93A	BATTERY MONITOR-CHECK LO/HI
94	HIGH BUDY SYSTEM
94A	HIGH BUDY SYSTEM
95	ENGINE BRAKE & RETARDER SYSTEM
95A	ENGINE BRAKE & RETARDER SYSTEM
95B	ENGINE BRAKE & RETARDER SYSTEM
97	TACHOMETER
99	A/C AUXILIARY-DASH SW
100	INTERIOR LTS-GENERAL LTS
100A	INTERIOR LTS-GENERAL LTS
100B	INTERIOR LTS-GENERAL LTS
100C	INTERIOR LTS-GENERAL LTS
101	WORLD TRANSM-LO SIGNAL SOL. LO
101A	WORLD TRANSM-LO SIGNAL SOL.
102	24V STARTER TO GENERATOR
102	WORLD TRANSM-SOL. GRD 1
103	WORLD TRANSM-SOL. 1
104	WORLD TRANSM-SOL. FORWARD
105	WORLD TRANSM-RETARDER & SUMP
105W	WORLD TRANSM-RETARDER & SUMP
106	WORLD TRANSM-OIL LEVEL HI
107	CHARG SYST-VOLTAGE REGUL. 'F'
107	WORLD TRANSM-LOCKUP SOL. HI
108	WORLD TRANSM-RETARDER PUMP WAKE UP
108	24V DISC SW TO 24V SYSTEM
108A	CHARG SYST-VOLTAGE REGUL. 'B'
109	WORLD TRANSM-RET. SOL. LO
110	ALARM & SIGNAL-WATER TEMP
110	WORLD TRANSM-LOCKUP SOL. LO
111	BATTERY GRD
112	WORLD TRANSM-SOL. C6
112	WORLD TRANSM-SPARE OUTPUT (+)
113	ALARM & SIGNAL-OIL PRESS
113	WORLD TRANSM-REVERSE WARNING
114	WORLD TRANSM-SPARE OUTPUT (-)
114	INTERIOR LTS-DASH LT REGUL.
114A	INTERIOR LTS-DASH LT

NO.	SYSTEM
114B	INTERIOR LTS-DASH LT REGUL.
114C	INTERIOR LTS-DASH LT
115	ALARM & SIGNAL-TAG PRESS
115	DDEC III-COOLANT LEVEL
115	WORLD TRANSM-DO NOT SHIFT SIGNAL
115A	ALARM & SIGNAL-TAG PRESS
115B	ALARM & SIGNAL-TAG PRESS
115C	DDEC III-COOLANT LEVEL
115W	WORLD TRANSM-DO NOT SHIFT SIGNAL
116	WORLD TRANSM-LO SIGNAL SOL. HI
116	A/C & HEAT SYSTEM-DRIVER'S HTR
116A	A/C & HEAT SYSTEM-DRIVER'S HTR
116B	A/C & HEAT SYSTEM-DRIVER'S HTR
117	ALARM & SIGNAL-TRANSM OIL TEMP
117A	ALARM & SIGNAL-TRANSM OIL TEMP
118	WORLD TRANSM-SPARE INPUT (+)
119	CH|ME-HOSTESS & PASSENGER
119	WORLD TRANSM-ENG BRK INPUT (+)
119A	CH|ME-HOSTESS & PASSENGER
119B	CH|ME-HOSTESS & PASSENGER
120	12V HOT WIRE
120	WORLD TRANSM-SOL. C1
120D	12V HOT WIRE
120V	VIDEO SYSTEM
120Z	VIDEO SYSTEM
121	WORLD TRANSM-SOL. GRD 2
121	CIGAR LIGHTER
122	A/C & HEAT SYSTEM-DRIVER'S HTR
122	A/C & HEAT SYSTEM-FRESH AIR
122	WORLD TRANSM-SOL. 2
123	WORLD TRANSM-NEUTRAL START
123	ALARM & SIGNAL-FIRE DETECTOR
123A	ALARM & SIGNAL-FIRE DETECTOR
124	WORLD TRANSM-THROTTLE (HI)
124	LAVATORY-FAN
125	WORLD TRANSM-RETARDER INDICATOR
125W	WORLD TRANSM-RETARDER INDICATOR
126	ALARM & SIGNAL-PRESS SW.
126	KNEELING SYSTEM
126A	KNEELING SYSTEM
126B	KNEELING SYSTEM
126C	KNEELING SYSTEM
126E	KNEELING SYSTEM
127	WORLD TRANSM-RETARDER FEED SOL.
127	PRE-HEAT WATER HEATER
127A	PRE-HEAT WATER HEATER
127B	PRE-HEAT WATER HEATER
127K	PRE-HEAT WATER HEATER
127X	PRE-HEAT WATER HEATER
128	WORLD TRANSM-SOL. C2
128A	PRE-HEAT WATER HEATER
128B	PRE-HEAT WATER HEATER
128C	PRE-HEAT WATER HEATER
128D	PRE-HEAT WATER HEATER
128E	PRE-HEAT WATER HEATER
128F	PRE-HEAT WATER HEATER
128W	PRE-HEAT WATER HEATER
128X	PRE-HEAT WATER HEATER
129	WORLD TRANSM-SOL. C5

NO.	SYSTEM
129	PRE-HEAT WATER HEATER
129A	PRE-HEAT WATER HEATER
129B	PRE-HEAT WATER HEATER
130	WORLD TRANSM-SOL. GRD 3
130	A/C & HEAT SYSTEM-EVAPORATOR
130	A/C & HEAT SYSTEM-EVAPORATOR
131	24V DISC SW TO FR JCT PANEL
131	WORLD TRANSM-SOL. C4
132	WORLD TRANSM-ENG BRK OUTPUT (-)
132K	WORLD TRANSM-ENG BRK OUTPUT (-)
133	WORLD TRANSM-RET. ACTUATOR HI
133	GALLEY SYSTEM-CONTAINER RH
133A	GALLEY SYSTEM-CONTAINER RH
134	WORLD TRANSM-RET. APPLY SOL. HI
134	GALLEY SYSTEM-CONTAINER RH
134A	GALLEY SYSTEM-CONTAINER RH
135	WORLD TRANSM-ANALOG GRD
135	A/C AUXILIARY-FAN
135A	A/C AUXILIARY-FAN
135B	A/C AUXILIARY-COIL SENSING
135C	WORLD TRANSM-RETARDER TEMP
135D	WORLD TRANSM-RETARDER RES HOD
136	GALLEY SYSTEM-LAMP
136	WORLD TRANSM-ECU POWER
136V	WORLD TRANSM-12V BATTERY
136W	WORLD TRANSM-12V BATTERY
136X	WORLD TRANSM-12V BATTERY
137	WORLD TRANSM-RETARDER
137	RR VIEW MIRROR
137A	RR VIEW MIRROR
138	WORLD TRANSM-RETARDER TEMP
138	ABS SYSTEM
138A	A/C AUXILIARY-FAN
138B	ABS SYSTEM
138C	A/C AUXILIARY-FAN
139	ABS SYSTEM
139A	A/C AUXILIARY-FAN
139B	WORLD TRANSM-OUTPUT SPEED HI
139W	A/C AUXILIARY-FAN
140	A/C AUXILIARY-SHUTTER
140	WORLD TRANSM-OUTPUT SPEED LO
140	ABS SYSTEM
141	ABS SYSTEM
141	WORLD TRANSM-ENGINE SPEED HI
142	WORLD TRANSM-SERIAL COM. A
142	ABS SYSTEM
142	ABS SYSTEM
143	WORLD TRANSM-ECU BATTERY GRD
143W	WORLD TRANSM-BATTERY GRD
143X	WORLD TRANSM-BATTERY GRD
144	WORLD TRANSM-ECU CHASSIS GRD
144	ABS SYSTEM
144A	ABS SYSTEM
145	ABS SYSTEM
146	ABS SYSTEM
146	WORLD TRANSM-IGNITION SENSE
146W	WORLD TRANSM-12V IGNITION
146X	WORLD TRANSM-12V IGNITION

CIRCUIT NUMBER CODE — PAGE: 3

NO.	SYSTEM
147	WORLD TRANSM-OIL TEMP
147	ABS SYSTEM
147A	ETHER COLD START
147B	ABS SYSTEM
148	WORLD TRANSM-OUTPUT SPEED LO
149	WORLD TRANSM-TURBINE SPEED HI
149	ABS SYSTEM
149A	ABS SYSTEM
150	ABS SYSTEM-SPARE
150	WORLD TRANSM-ENGINE SPEED LO
150	DDEC III-ECM BATTERY GRD
150A	DDEC III-ECM BATTERY GRD
151	DDEC III-ECM BATTERY GRD
151	WORLD TRANSM-SERIAL COM. B
151	ABS SYSTEM-SPARE
152	ABS SYSTEM-SPARE
153	ABS SYSTEM
153	WORLD TRANSM-SPARE INPUT (-)
154	WORLD TRANSM-ABS RETARDER INPUT
155	WORLD TRANSM-SPARE INPUT (-)
155	ABS SYSTEM
156	WORLD TRANSM-THROTTLE POS.
156	ABS SYSTEM
156A	ABS SYSTEM
156C	ABS SYSTEM
156W	ABS SYSTEM
157	WORLD TRANSM-SPEEDOMETER SIGNAL
157	ABS SYSTEM
157A	ABS SYSTEM
157B	ABS SYSTEM
157C	ABS SYST.-CANCEL SEC. BRK
158	WORLD TRANSM-DIMMER
160	WORLD TRANSM-SERIAL INTERFACE (-)
161	WORLD TRANSM-SIGNAL GRD
161B	WORLD TRANSM-SIGNAL GRD
162	WORLD TRANSM-PRESS. SW C3
163	WORLD TRANSM-RETARDER PRESSURE
164	WORLD TRANSM-RET. ACTUATOR SIGN
165	WORLD TRANSM-OIL LEVEL SIGNAL
168	WORLD TRANSM-SERIAL INTERFACE (+)
170C	LUGGAGE DOOR LOCK
170D	LUGGAGE DOOR LOCK
170E	LUGGAGE DOOR LOCK
170F	LUGGAGE DOOR LOCK
170G	LUGGAGE DOOR LOCK
170H	LUGGAGE DOOR LOCK
170J	LUGGAGE DOOR LOCK
170L	LUGGAGE DOOR LOCK
170M	LUGGAGE DOOR LOCK
170N	LUGGAGE DOOR LOCK
170P	LUGGAGE DOOR LOCK
170R	LUGGAGE DOOR LOCK
170S	LUGGAGE DOOR LOCK
170V	LUGGAGE DOOR LOCK
170W	LUGGAGE DOOR LOCK
170X	LUGGAGE DOOR LOCK
170Y	LUGGAGE DOOR LOCK
170Z	LUGGAGE DOOR LOCK
182	PYROMETER
182A	PYROMETER

NO.	SYSTEM
197A	FUEL WATER FILTER
197B	FUEL WATER FILTER
201	WORLD TRANSM-SPARE
202	WORLD TRANSM-SPARE
203	WORLD TRANSM-SPARE
204	WORLD TRANSM-SPARE
205	WORLD TRANSM-SPARE
206	WORLD TRANSM-SPARE
214	WORLD TRANSM-BACK UP SIGNAL
214A	BACK UP SIGNAL
214B	BACK UP SIGNAL
231	NEUTRAL SIGNAL GRD
240	DDEC III-ECM 12V FEEDING
241	DDEC III-ECM 12V FEEDING
250	PROGRAMMING PLUG
290	FAN CLUTCH RADIATOR
291	FAN CLUTCH RADIATOR SPD 1
292	FAN CLUTCH RADIATOR SPD 2
417	DDEC III-LIMIT SPEED GOVERNOR
438	DDEC III-ENGINE ENGINE LIGHT
439	DDEC III-12V IGNITION
440	DDEC III-12V IGNITION
440A	DDEC III-12V IGNITION
451	DDEC III-A/C FAN CLUTCH
505	DDEC III-TACHOMETER DRIVE
509	DDEC III-STOP ENGINE LIGHT
513	DDEC III-FAST IDLE SIGNAL
521	DDEC III-ENGINE BRAKE DISABLE
525	DDEC III-STOP ENGINE
528	DDEC III-STOP ENG. OVERRIDE
531	DDEC III-CRUISE CLUTCH RELEASE
532	DDEC III-CRUISE SET SW
543	DDEC III-CRUISE STOP SW CUT IN
544	DDEC III-CRUISE ON/OFF SW
545	DDEC III-CRUISE RESUME SW
555	DDEC III-CRUISE CLUTCH SPEED 1
556	DDEC III-VEHICLE SPEED (+)
557	DDEC III-VEHICLE SPEED (-)
563	DDEC III-CRUISE CLUTCH SPEED* 2
583	DDEC III-ENGINE BRAKE 4 CYL.
584	DDEC III-PROGRAMMING LIGHT
900	DDEC III-DATA LINK (+)
901	DDEC III-DATA LINK (-)
908	DDEC III-HYDRAULIC TRANSM. MODUL.
916	DDEC III-SENSOR SUPPLY (5VDC)
952	DDEC III-DATA LINK RETURN
953	DDEC III-BATTERY GRD
953C	DDEC III-BATTERY GRD
979	DDEC III-ENGINE BRAKE 2 CYL.
A	A/C & HEAT SYSTEM-HI PRES.
A1	A/C & HEAT SYSTEM-LO PRES.
A4	A/C & HEAT SYSTEM-CONTROL SW
A5	A/C & HEAT SYSTEM-CONTROL SW
A6	A/C & HEAT SYSTEM-CONTROL SW
L	INTERIOR LTS-11OV FLUORESCENT
L1	INTERIOR LTS-11OV FLUORESCENT
L1A	INTERIOR LTS-11OV FLUORESCENT
L1C	INTERIOR LTS-11OV FLUORESCENT
L2A	INTERIOR LTS-11OV FLUORESCENT
L7	INTERIOR LTS-11OV FLUORESCENT
L8	ENG.BLK & WATER TANK-HEATER

NO.	SYSTEM
L9	ENG.BLK & WATER TANK-HEATER
N1	VIDEO SYSTEM- 11OV
N2	INTERIOR LTS-11OV FLUORESCENT
J4	A/C & HEAT SYSTEM-DRIVER'S HTR
O3	A/C & HEAT SYSTEM-DRIVER'S HTR
R1	A/C & HEAT SYSTEM-DRIVER'S HTR
R6	A/C & HEAT SYSTEM-DRIVER'S HTR
SH1	SHIELD WIRE GRD
SH2	SHIELD WIRE GRD
SH3	SHIELD WIRE GRD
V5	A/C & HEAT SYSTEM-DRIVER'S HTR
V7	A/C & HEAT SYSTEM-DRIVER'S HTR

NO.	SYSTEM
0	GRD BATTERY A TO GRD STUD
0	GRD BATTERY A1 TO GRD STUD
0	GRD STARTER MOTOR TO GRD STUD
0	FJP - GRD
0	RJB - GRD
0	BJP - GRD
0A	RJB - GRD
0A	FR SERV JCT BOX - GRD
0B	FJP - GRD
OB	RJB - GRD
0BE	0V BATTERY MONITOR
0C	RJB - GRD
0D	FJP - GRD
0D	RJB - GRD
0E	RJB - GRD
0F	RJB - GRD
0H	FJP - GRD
0M	BACK-UP MONITOR
0P	RJB - GRD
0R	FJP - SOUND SYSTEM GRD
0S2	RADIO- BATTERY GRD
0S3	VIDEO- BATTERY GRD
0SS	SOUND SYSTEM - BATTERY GRD
00SS	SOUND SYSTEM - BATTERY GRD
0T	FJP - GRD
0T	FR SERVICE CPT-GRD
0V	FJP - GRD
0VA	GRD STUD TO BAT.EQUALIZER
0W	FJP - GRD
0W	WORLD TRANSM. VIM CHASSIS GRD
0WA	PRE_HEAT WATER HEATER WEBASTO
0WB	PRE_HEAT WATER HEATER WEBASTO
0X	RJB - GRD
0Y	ABS SYSTEM-GRD
0Y1	ABS SYSTEM-GRD
2	A/C & HEAT SYSTEM-CONSENSER
2A	A/C & HEAT SYSTEM-CONSENSER
2C	A/C & HEAT SYSTEM-CONSENSER
2D	A/C & HEAT SYSTEM-CONSENSER
3	A/C & HEAT SYSTEM-EVAPORATOR
3A	A/C & HEAT SYSTEM-EVAPORATOR
3B	A/C & HEAT SYSTEM-EVAPORATOR
4	CHIME-PASSENGER & HOSTESS
4A	CHIME-PASSENGER & HOSTESS
4B	CHIME-PASSENGER & HOSTESS
4C	CHIME-PASSENGER & HOSTESS
4D	CHIME-PASSENGER & HOSTESS
4E	CHIME-PASSENGER & HOSTESS
5	INTERIOR LTS-EMERGENCY EXIT LTS
5A	INTERIOR LTS-EMERGENCY EXIT LTS
5C	INTERIOR LTS-EMERGENCY EXIT LTS
6	INTERIOR LTS-AISLE LTS
7	INTERIOR LTS-STEPWELL LTS
8A	INTERIOR LTS-AISLE & EMERG. LTS
8B	INTERIOR LTS-AISLE & EMERG. LTS
9	INTERIOR LTS-ENGINE CPT
9	INTERIOR LTS-RR JCT BOX
9	INTERIOR LTS-FR SERVICE CPT
9A	INTERIOR LTS-FR JCT PANEL
9E	CHIME-PASSENGER & HOSTESS
10	A/C & HEAT SYSTEM-LO PRES.

NO.	SYSTEM
10	INTERIOR LTS-LUGGAGE CPT
10A	INTERIOR LTS-LUGGAGE CPT
10A	A/C AUXILIARY-CLUTCH
10B	INTERIOR LTS-LUGGAGE CPT
10C	INTERIOR LTS-LUGGAGE CPT
11	FR.DESTINATION SIGN
11A	FR.DESTINATION SIGN
11B	FR.DESTINATION SIGN
11C	FR.DESTINATION SIGN
11D	FR.DESTINATION SIGN
11E	FR.DESTINATION SIGN
11K	FR.DESTINATION SIGN
11P	FR.DESTINATION SIGN
12	12V BATTERY A1 TO BATTERY A
12	12V BATTERY B1 TO BATTERY A
12	12V BATTERY B1 TO BATTERY B
12	12V VIDEO SYSTEM
12A	FR JCT PANEL 12V DISC SW
12A	RR JCT BOX 12V DISC SW
12B	FR JCT PANEL 12V DISC SW
12BE	12V BATTERY MONITOR
12C	RR JCT BOX 12V DISC SW
12D	FR JCT PANEL 12V HOT WIRE
12E	FR JCT PANEL 12V DISC SW
12F	RR JCT BOX 12V DISC SW
12G	FR JCT PANEL 12V DISC SW
12I	FR JCT PANEL 12V IGNITION
12IF	FR JCT PANEL 12V IGNITION
12IM	BACK-UP MONITOR
12P	FR JCT PANEL 12V DISC SW
12S	12V BATTERY-SOUND SYSTEM RADIO
12S1	12V BATTERY-SOUND SYSTEM RADIO
12S2	12V BATTERY-SOUND SYSTEM RADIO
12SB	12V BATTERY-SOUND SYSTEM
12SS	12V BATTERY-SOUND SYSTEM
12T	RR JCT BOX 12V DISC SW
12VA	12V BATTERY POST TO EQUALIZER
12VF	12V FR JCT PANEL
12VI	RR JCT BOX 12V IGNITION
12VR	RR JCT BOX 12V DISC SW
12W	12V HOT WIRE DDEC III FEED
13A	ALARM & SIGNAL-LO AIR PRIM.
13B	ALARM & SIGNAL-LO AIR SEC.
14	LAVATORY-FLUSHING SW
15	EXTERIOR LTS-MULTI FUNC LEVEL
15	ALARM & SIGNAL-DIF. OIL TEMP
15	WIPER & WASHER SYSTEM
15A	ALARM & SIGNAL-DIF. OIL TEMP
16	SPEEDOMETER SIGNAL (+)
16T	SPEED SW SIGNAL IN (+)
17	EXTERIOR LTS-FLASHER UNIT
17A	EXTERIOR LTS-FLASHER UNIT
18	ETHER COLD START SYST.
20	SPEEDOMETER SIGNAL (-)
20T	SPEED SW SIGNAL IN (-)
21	EXTERIOR LTS-DIRECTIONNAL LH
21A	EXTERIOR LTS-DIRECTIONNAL LH
21B	EXTERIOR LTS-DIRECTIONNAL LH
21H	EXTERIOR LTS-HAZARD SIGNAL
23	EXTERIOR LTS-DIRECTIONNAL RH
23A	EXTERIOR LTS-DIRECTIONNAL RH

CIRCUIT NUMBER CODE PAGE E : 1

NO.	SYSTEM
23B	EXTERIOR LTS-DIRECTIONNAL RH
23E	KNEELING-RH EXT. FLASHING LTS
23F	KNEELING-RH EXT. FLASHING LTS
23H	EXTERIOR LTS-HAZARD SIGNAL
24	BATTERY B TO BATTERY B1
24	BOOSTER TO 24V DISC SW
24A	RR JCT BOX 24V DISC SW
24A	FR JCT PANEL 24V DISC SW
24B	FR JCT PANEL 24V DISC SW
24BE	BATTERY MONITOR
24C	FR JCT PANEL 24V DISC SW
24F	FR JCT PANEL 24V DISC SW
24I	FR JCT PANEL 24V IGNITION
24I	RR JCT BOX 24V IGNITION
24IA	FR JCT PANEL 24V IGNITION
24IB	FR JCT PANEL 24V IGNITION
24K	FR JCT PANEL 24V DISC SW
24P	FR JCT PANEL 24V DISC SW
24R	RR JCT BOX 24V DISC SW
24S	RR JCT BOX 24V DISC SW
24S1	24V BATTERY-SOUND SYSTEM
24S2	24V BATTERY-SOUND SYSTEM
24S3	24V BATTERY-SOUND SYSTEM VIDEO
24S4	24V BATTERY-SOUND SYSTEM VIDEO
24SB	24V BATTERY-SOUND SYSTEM
24SS	24V BATTERY-SOUND SYSTEM
24T	RR JCT BOX 24V DISC SW
24VA	24V BATTERY POST TO EQUALIZER
24VI	RR JCT BOX 24V IGNITION
24VIF	FR JCT PANEL 24V IGNITION
24VD	FR JCT PANEL 24V HOT WIRE
24VD	RR JCTY BOX 24V HOT WIRE
24VF	FR JCT PANEL 24V DISC SW
24X	24V SPEED SW & KNEELING
25	12VAC GEN RLY ON SIGNAL
25A	NOT GENERATOR-WARNING LT
25B	EXTERIOR LTS-DAYTIME RUN LTS
25L	12VAC GEN RLY ON SIGNAL
27	LAVATORY-EMERGENCY BUZZER
28	A/C & HEAT SYSTEM-WARNING LT
29	A/C & HEAT SYSTEM-DRIVER'S HTR
29A	A/C & HEAT SYSTEM-DRIVER'S HTR
29B	A/C & HEAT SYSTEM-DRIVER'S HTR
30	GALLEY SYSTEM
30A	GALLEY SYSTEM
31A	A/C & HEAT SYSTEM-PRESSURE SW
31B	A/C & HEAT SYSTEM-PRESSURE SW
31B	WIPER & WASHER SYSTEM
32	EXTERIOR LTS-BACK-UP
32A	BACK-UP MONITOR
32B	EXTERIOR LTS-BACK-UP
32D	BACK-UP ALARM
32M	BACK-UP MONITOR
34	A/C & HEAT SYSTEM-CONDENSER
34A	A/C & HEAT SYSTEM-CONDENSER
35	INTERIOR LTS-STEPWELL LTS
36	ENGINE BRAKE SYSTEM & RETARDER
36A	ENGINE BRAKE SYSTEM
36C	ENGINE BRAKE SYSTEM-ABS CANCEL
37	LAVATORY-OCCUPIED LTS
38	FUEL WATER FILTER

NO.	SYSTEM
38	INTERIOR LTS-24V FLUORESCENT
38A	INTERIOR LTS-24V FLUORESCENT
38B	INTERIOR LTS-24V FLUORESCENT
38C	INTERIOR LTS-24V FLUORESCENT
38E	INTERIOR LTS-24V FLUORESCENT
38F	INTERIOR LTS-24V FLUORESCENT
39	INTERIOR LTS-DRIVER'S LTS
39A	INTERIOR LTS-DRIVER'S LTS
39B	INTERIOR LTS-DRIVER'S LTS
44	EXTERIOR LTS-FOG
44A	EXTERIOR LTS-FOG
44B	EXTERIOR LTS-FOG
44C	EXTERIOR LTS-FOG & HAZARD SW
45	A/C & HEAT SYSTEM-DRIVER'S CTRL
45	A/C & HEAT SYSTEM-WATER VALVE
45A	A/C & HEAT SYSTEM-WATER VALVE
45B	A/C & HEAT SYSTEM-WATER VALVE
45E	A/C & HEAT SYSTEM-BYPASS VALVE
46	EXTERIOR LTS-MARKER
46A	EXTERIOR LTS-MARKER
46B	EXTERIOR LTS-MARKER
46C	EXTERIOR LTS-MARKER
47	A/C & HEAT SYSTEM-DRIVER'S HTR
47	A/C & HEAT SYSTEM-FULL AIR
48	INTERIOR LTS-STEPWELL LTS
51	INTERIOR LTS-READING LTS
52	ALARM & SIGNAL-ELEC. HORN
52A	ALARM & SIGNAL-ELEC. HORN
53	ALARM & SIGNAL-ELEC. HORN
53B	WIPER & WASHER SYSTEM
53C	WIPER & WASHER SYSTEM
53E	WIPER & WASHER SYSTEM
53F	WIPER & WASHER SYSTEM
50J	WIPER & WASHER SYSTEM
54	SPARE-F.J.B. TO FR ROOF
55	EXTERIOR LTS-HI BEAM
56	TRANSM. OIL TEMP GAUGE
57	EXTERIOR LTS-HI BEAM
57	A/C & HEAT SYSTEM-WATER PUMP
57A	EXTERIOR LTS-HI BEAM
57A	A/C & HEAT SYSTEM-WATER PUMP
57B	A/C & HEAT SYSTEM-WATER PUMP
57C	PRE-HEAT WATER HEATER
57D	PRE-HEAT WATER HEATER
57E	PRE-HEAT WTR HTR PUMP
57F	PRE-HEAT WATER HEATER
57W	PRE-HEAT WATER HEATER
58	EXTERIOR LTS-LO BEAM
58A	EXTERIOR LTS-LO BEAM
58B	EXTERIOR LTS-LO BEAM
58E	EXTERIOR LTS-LO BEAM
59A	ENGINE BRAKE SYSTEM
60	EXTERIOR LTS-RR & FR ROOF GRD
61	EXTERIOR LTS-24V FEED SW
61A	EXTERIOR LTS-HEAD SIGNAL
62	LAVATORY-OCCUPIED LTS
62B	LAVATORY-OCCUPIED LTS
63	EXTERIOR LTS-CLEARANCE
63A	EXTERIOR LTS-CLEARANCE
63B	EXTERIOR LTS-CLEARANCE

NO.	SYSTEM
63C	EXTERIOR LTS-MARKER SIGNAL
63D	EXTERIOR LTS-MARKER & TAIL
63E	EXTERIOR LTS-CLEARANCE
63F	EXTERIOR LTS-MARKER BLINKER
63H	EXTERIOR LTS-TAIL
63K	EXTERIOR LTS-TAIL
64	DIFFERENTIAL OIL TEMP GAUGE
65A	PRE-HEAT WATER HEATER
66B	RR JCT BOX 12V HOT WIRE
67	A/C & HEAT SYSTEM
67A	A/C & HEAT SYSTEM
67B	A/C & HEAT SYSTEM
67C	A/C & HEAT SYSTEM
69	RR JCT BOX 24V HOT WIRE
70	INTERIOR LTS-HAT RACK LTS
70A	INTERIOR LTS-HAT RACK LTS
70C	INTERIOR LTS-HAT RACK LTS
71	A/C AUXILIARY-DASH SW
71B	R J B GRD-BACK UP ALARM
71H	A/C AUXILIARY-DASH SW
72	A/C AUXILIARY-DASH SW
72H	A/C AUXILIARY-DASH SW
73	LAVATORY-NIGHT LTS
74	INTERIOR LTS-READING LTS
74A	INTERIOR LTS-READING LTS
74B	INTERIOR LTS-READING LTS
75	INTERIOR LTS-READING LTS
76	FUEL TANK GAUGE
76C	LOW FUEL LT
76L	LOW FUEL LT
76M	FUEL PRIME PUMP
76P	FUEL PRIME PUMP
77H	A/C & HEAT SYSTEM-CLUTCH
77B	A/C AUXILIARY-LIQ. SOL.
77C	A/C AUXILIARY-LIQ. SOL.
77H	A/C & HEAT SYSTEM-FAN CLUTCH
78	24V HOT WIRE
78A	24V HOT WIRE
80	WORLD TRANSM-NEUTRAL SIGNAL GRD
81	EXTERIOR LTS-STOP SW
82	EXTERIOR LTS-STOP SIGNAL
82A	EXTERIOR LTS-STOP SIGNAL
82B	EXTERIOR LTS-STOP LTS
82K	EXTERIOR LTS-STOP RETARDER
82L	EXTERIOR LTS-STOP LTS
82R	EXTERIOR LTS-STOP LTS
83	ENGINE CTR-MAST KEY SW ACCES
84	ENGINE CTR-MAST KEY SW START
84A	ENGINE CTR-MAST KEY SW START
85	ENGINE CTR-MAST KEY SW IGN
85A	24V IGN DASH INSTRUMENTATION
85B	24V IGN DASH INSTRUMENTATION
85BE	BATTERY MONITOR 24V IGN
85C	ENGINE CTR-24V IGNITION
85C	PARKING BRAKE SWITCH
85F	LO AIR SONALERT
85W	ABS-24V IGN
85X	ABS-24V IGN

NO.	SYSTEM
85Y	ABS-WARNING LT
86	ENGINE CTR-STARTER SOL SIGN
86A	ENGINE CTR-STARTER SOL SIGN
87B	ENGINE CTR-24V IGNITION
88	ENGINE CTR-RR START SIGNAL
89	ENGINE CTR-RR START SIGNAL
90	A/C & HEAT SYSTEM-WATER PUMP
90	GALLEY SYSTEM
90	DIGITAL CLOCK
90A	GALLEY SYSTEM
90B	ENGINE CTR-MAST KEY SW FEED
90B	GALLEY SYSTEM
90B	FR JCT PANEL 24V DISC SW
90C	ALARM & SIGNAL-FIRE DETECTOR
90E	GALLEY SYSTEM
90F	GALLEY SYSTEM
91	PARKING BRAKE SW SIGNAL
91A	PARKING BRAKE SW SIGNAL
91B	DDEC III-FAST IDLE SIGNAL
91B	EXTERIOR LTS-RUN LTS CANCEL
91C	PRE-HEAT WATER HEATER
92	BATTERY MONITOR-CHECK BALANCE
92A	BATTERY MONITOR-CHECK BALANCE
93	BATTERY MONITOR-CHECK LO/HI
93A	BATTERY MONITOR-CHECK LO/HI
94	HIGH BUOY SYSTEM
94A	HIGH BUOY SYSTEM
95	ENGINE BRAKE & RETARDER SYSTEM
95A	ENGINE BRAKE & RETARDER SYSTEM
95B	ENGINE BRAKE & RETARDER SYSTEM
97	TACHOMETER (-)
99	A/C AUXILIARY-DASH SW
100	INTERIOR LTS-GENERAL LTS
100A	INTERIOR LTS-GENERAL LTS
100B	INTERIOR LTS-GENERAL LTS
100C	INTERIOR LTS-GENERAL LTS
101	WORLD TRANSM-LO SIGNAL SOL. LO
101A	24V DISC SW TO BATTERY
102	24V STARTER TO GENERATOR
102	WORLD TRANSM-SOL. GRD 1
102	WORLD TRANSM-SOL. C3
104	WORLD TRANSM-SOL. FORWARD
105	WORLD TRANSM-RETARDER & SUMP
105W	WORLD TRANSM-RETARDER & SUMP
106	WORLD TRANSM-OIL LEVEL HI
107	CHARG SYST-VOLTAGE REGUL. "F"
107	WORLD TRANSM-LOCKUP SOL. HI
108	WORLD TRANSM-REMOTE PWR WAKE UP
108	24V DISC SW TO 24V SYSTEM
108A	CHARG SYST-VOLTAGE REGUL. "B"
109	WORLD TRANSM-RET. SOL. LO
110	ALARM & SIGNAL-WATER TEMP
110	WORLD TRANSM-LOCKUP SOL. LO
111	BATTERY GRD
111	WORLD TRANSM-SOL. C6
112	WORLD TRANSM-SPARE OUTPUT (+)
113	ALARM & SIGNAL-OIL PRESS
113	WORLD TRANSM-REVERSE WARNING
114	WORLD TRANSM-SPARE OUTPUT (-)
114	INTERIOR LTS-DASH LT REGUL.
114A	INTERIOR LTS-DASH LT

CIRCUIT NUMBER CODE PAGE E : 2

NO.	SYSTEM
114B	INTERIOR LTS-DASH LT REGUL.
114C	INTERIOR LTS-DASH LT
115	ALARM & SIGNAL-TAG PRESS
115	DDEC III-COOLANT LEVEL
115	WORLD TRANSM-DO NOT SHIFT SIGNAL
115A	ALARM & SIGNAL-TAG PRESS
115B	ALARM & SIGNAL-TAG PRESS
115C	DDEC III-COOLANT LEVEL
115W	WORLD TRANSM-DO NOT SHIFT SIGNAL
116	WORLD TRANSM-LO SIGNAL SOL. HI
116	A/C & HEAT SYSTEM-DRIVER'S HTR
116A	A/C & HEAT SYSTEM-DRIVER'S HTR
116B	A/C & HEAT SYSTEM-DRIVER'S HTR
117	WORLD TRANSM-SPARE INPUT (-)
117	ALARM & SIGNAL-TRANSM OIL TEMP
117A	ALARM & SIGNAL-TRANSM OIL TEMP
118	WORLD TRANSM-SPARE INPUT (+)
119	CHIME-HOSTESS & PASSENGER
119	WORLD TRANSM-ENG BRK INPUT (+)
119A	CHIME-HOSTESS & PASSENGER
119B	CHIME-HOSTESS & PASSENGER
120	12V HOT WIRE
120	WORLD TRANSM-SOL. C1
120D	12V HOT WIRE
120Y	VIDEO SYSTEM
120Z	VIDEO SYSTEM
121	WORLD TRANSM-SOL. GRD 2
121	CIGAR LIGHTER
122	A/C & HEAT SYSTEM-DRIVER'S HTR
122	A/C & HEAT SYSTEM-FRESH AIR
122	WORLD TRANSM-SOL. GRD 4
123	WORLD TRANSM-NEUTRAL START
123	ALARM & SIGNAL-FIRE DETECTOR
123A	ALARM & SIGNAL-FIRE DETECTOR
124	WORLD TRANSM-THROTTLE (HI)
125	LAVATORY-FAN
125	WORLD TRANSM-RETARDER INDICATOR
125W	WORLD TRANSM-RETARDER INDICATOR
126	WORLD TRANSM-LUBE PRESS SW.
126	KNEELING SYSTEM
126A	KNEELING SYSTEM
126B	KNEELING SYSTEM
126C	KNEELING SYSTEM
126G	KNEELING SYSTEM
126H	KNEELING SYSTEM
127	WORLD TRANSM-RETARDER FEED SOL.
127	PRE-HEAT WATER HEATER
127A	PRE-HEAT WATER HEATER
127B	PRE-HEAT WATER HEATER
127W	PRE-HEAT WATER HEATER
127X	PRE-HEAT WATER HEATER
128	WORLD TRANSM-SOL. C2
128A	PRE-HEAT WATER HEATER
128B	PRE-HEAT WATER HEATER
128C	PRE-HEAT WATER HEATER
128D	PRE-HEAT WATER HEATER
128E	PRE-HEAT WATER HEATER
128F	PRE-HEAT WATER HEATER
128W	PRE-HEAT WATER HEATER
128X	PRE-HEAT WATER HEATER
129	WORLD TRANSM-SOL. C5

NO.	SYSTEM
129	PRE-HEAT WATER HEATER
129A	PRE-HEAT WATER HEATER
129B	PRE-HEAT WATER HEATER
130	WORLD TRANSM-SOL. GRD 3
130A	A/C & HEAT SYSTEM-EVAPORATOR
130	A/C & HEAT SYSTEM-EVAPORATOR
131	24V DISC SW TO FR JCT PANEL
131	WORLD TRANSM-SOL. C4
132	WORLD TRANSM-ENG BRK OUTPUT (-)
132W	WORLD TRANSM-ENG BRK OUTPUT (-)
133	WORLD TRANSM-RET. ACTUATOR HI
133	GALLEY SYSTEM-CONTAINER RH
133A	GALLEY SYSTEM-CONTAINER RH
134	WORLD TRANSM-RET. APPLY SOL. HI
134	GALLEY SYSTEM-CONTAINER RH
134A	GALLEY SYSTEM-CONTAINER RH
135	WORLD TRANSM-ANALOG GRD
135	A/C AUXILIARY-FAN
135A	A/C AUXILIARY-FAN
135B	A/C AUXILIARY-COIL SENSING
135C	WORLD TRANSM-RETARDER TEMP
135D	WORLD TRANSM-RETARDER RES MOD
136	GALLEY SYSTEM-LAMP
136	WORLD TRANSM-ECU POWER
136V	WORLD TRANSM-12V BATTERY
136W	WORLD TRANSM-12V BATTERY
136X	WORLD TRANSM-12V BATTERY
137	WORLD TRANSM-RETARDER
137	RR VIEW MIRROR
137A	RR VIEW MIRROR
138	WORLD TRANSM-RETARDER TEMP
138	ABS SYSTEM
138	A/C AUXILIARY-FAN
138A	ABS SYSTEM
138A	A/C AUXILIARY-FAN
139	ABS SYSTEM
139	A/C AUXILIARY-FAN
139	WORLD TRANSM-OUTPUT SPEED HI
139A	A/C AUXILIARY-FAN
140	A/C AUXILIARY-SHUTTER
140	WORLD TRANSM-OUTPUT SPEED LO
140	ABS SYSTEM
141	ABS SYSTEM
141	WORLD TRANSM-ENGINE SPEED HI
142	WORLD TRANSM-SERIAL COM. A
142	ABS SYSTEM
143	ABS SYSTEM
143A	ABS SYSTEM
143	WORLD TRANSM-ECU BATTERY GRD
143W	WORLD TRANSM-BATTERY GRD
143X	WORLD TRANSM-BATTERY GRD
144	WORLD TRANSM-ECU CHASSIS GRD
144	ABS SYSTEM
144A	ABS SYSTEM
145	ABS SYSTEM
146	ABS SYSTEM
146	WORLD TRANSM-IGNITION SENSE
146W	WORLD TRANSM-12V IGNITION
146X	WORLD TRANSM-12V IGNITION

NO.	SYSTEM
147	WORLD TRANSM-OIL TEMP
147	ABS SYSTEM
147	ETHER COLD START
147A	ETHER COLD START
148	ABS SYSTEM
148	WORLD TRANSM-OUTPUT SPEED LO
149	WORLD TRANSM-TURBINE SPEED HI
149	ABS SYSTEM
149A	ABS SYSTEM
150	ABS SYSTEM-SPARE
150	WORLD TRANSM-ENGINE SPEED LO
150	DDEC III-ECM BATTERY GRD
150A	DDEC III-ECM BATTERY GRD
151	DDEC III-ECM BATTERY GRD
151	WORLD TRANSM-SERIAL COM. B
151	ABS SYSTEM-SPARE
152	ABS SYSTEM-SPARE
153	ABS SYSTEM
153	WORLD TRANSM-SPARE INPUT (-)
154	WORLD TRANSM-ABS RETARDER INPUT
155	WORLD TRANSM-SPARE INPUT (-)
155	ABS SYSTEM
156	WORLD TRANSM-THROTTLE POS.
156	ABS SYSTEM
156A	ABS SYSTEM
156C	ABS SYSTEM
156W	ABS SYSTEM
157	WORLD TRANSM-SPEEDOMETER SIGNAL
157	ABS SYSTEM
157A	ABS SYSTEM
157B	ABS SYSTEM
157C	ABS SYST.-CANCEL SEC. BRK
158	WORLD TRANSM-DIMMER
160	WORLD TRANSM-SER. INTERFACE (-)
161	WORLD TRANSM-SIGNAL GRD
161B	WORLD TRANSM-SIGNAL GRD
162	WORLD TRANSM-PRESS. SW C3
163	WORLD TRANSM-RETARDER ENABLE
164	WORLD TRANSM-RET. ACTUATOR SIGN
165	WORLD TRANSM-OIL LEVEL SIGNAL
168	WORLD TRANSM-SER. INTERFACE (+)
170C	LUGGAGE DOOR LOCK
170D	LUGGAGE DOOR LOCK
170E	LUGGAGE DOOR LOCK
170F	LUGGAGE DOOR LOCK
170G	LUGGAGE DOOR LOCK
170H	LUGGAGE DOOR LOCK
170J	LUGGAGE DOOR LOCK
170L	LUGGAGE DOOR LOCK
170M	LUGGAGE DOOR LOCK
170N	LUGGAGE DOOR LOCK
170P	LUGGAGE DOOR LOCK
170R	LUGGAGE DOOR LOCK
170S	LUGGAGE DOOR LOCK
170V	LUGGAGE DOOR LOCK
170W	LUGGAGE DOOR LOCK
170X	LUGGAGE DOOR LOCK
170Y	LUGGAGE DOOR LOCK
170Z	LUGGAGE DOOR LOCK
182	PYROMETER
182A	PYROMETER

NO.	SYSTEM
197A	FUEL WATER FILTER
197B	FUEL WATER FILTER
201	WORLD TRANSM-SPARE
202	WORLD TRANSM-SPARE
203	WORLD TRANSM-SPARE
204	WORLD TRANSM-SPARE
205	WORLD TRANSM-SPARE
206	WORLD TRANSM-SPARE
214	WORLD TRANSM-BACK UP SIGNAL
214A	BACK UP SIGNAL
214B	BACK UP SIGNAL
231	NEUTRAL SIGNAL GRD
240	DDEC III-ECM 12V FEEDING
241	DDEC III-ECM 12V FEEDING
251	PRODRIVER-12V HOT WIRE
290	FAN CLUTCH RADIATOR
291	FAN CLUTCH RADIATOR SPD 1
292	FAN CLUTCH RADIATOR SPD 2
417	DDEC III-LIMIT SPEED GOVERNOR
419	DDEC III-CHECK ENGINE LIGHT
439	DDEC III-12V IGNITION
440	DDEC III-12V IGNITION
440A	DDEC III-12V IGNITION
451	DDEC III-A/C FAN CLUTCH
505	DDEC III-TACHOMETER DRIVE
509	DDEC III-STOP ENGINE LIGHT
510	DDEC III-FAST IDLE SIGNAL
524	DDEC III-ENGINE BRAKE DISABLE
525	DDEC III-FAST IDLE SIGNAL
528	DDEC III-STOP ENG. OVERRIDE
531	DDEC III-CRUISE CLUTCH RELEASE
541	DDEC III-CRUISE SET SW
543	DDEC III-CRUISE STOP SW CUT IN
544	DDEC III-CRUISE ON/OFF SW
545	DDEC III-CRUISE RESUME SW
555	DDEC III-FAN CLUTCH SPEED* 1
556	DDEC III-VEHICLE SPEED (+)
557	DDEC III-VEHICLE SPEED (-)
563	DDEC III-FAN CLUTCH SPEED* 2
583	DDEC III-ENGINE BRAKE 4 CYL.
750	PRODRIVER-ILLUMINATION LIGHT
900	DDEC III-DATA LINK (+)
901	DDEC III-DATA LINK (-)
908	DDEC III-HYDRAULIC TRANSM. MODUL.
916	DDEC III-SENSOR SUPPLY (5VDC)
952	DDEC III-SENSOR RETURN
953	DDEC III-BATTERY GRD
953C	DDEC III-BATTERY GRD
979	DDEC III-ENGINE BRAKE 2 CYL.
A	A/C & HEAT SYSTEM-HI PRES.
A1	A/C & HEAT SYSTEM-LO PRES.
A4	A/C & HEAT SYSTEM-CONTROL SW
A5	A/C & HEAT SYSTEM-CONTROL SW
A6	A/C & HEAT SYSTEM-CONTROL SW
L1	VIDEO SYSTEM- 110V
L1	INTERIOR LTS-110V FLUORESCENT
L1A	INTERIOR LTS-110V FLUORESCENT
L1C	INTERIOR LTS-110V FLUORESCENT
L2A	INTERIOR LTS-110V FLUORESCENT
L2C	INTERIOR LTS-110V FLUORESCENT
L8	ENG.BLK & WATER TANK-HEATER

CIRCUIT NUMBER CODE PAGE E : 3

NO.	SYSTEM
L9	ENG.BLK & WATER TANK-HEATER
N1	VIDEO SYSTEM- 110V
N2	INTERIOR LTS-110V FLUORESCENT
J4	A/C & HEAT SYSTEM-DRIVER'S HTR
O3	A/C & HEAT SYSTEM-DRIVER'S HTR
R1	A/C & HEAT SYSTEM-DRIVER'S HTR
R6	A/C & HEAT SYSTEM-DRIVER'S HTR
SH1	SHIELD WIRE GRD
SH2	SHIELD WIRE GRD
SH3	SHIELD WIRE GRD
V5	A/C & HEAT SYSTEM-DRIVER'S HTR
V7	A/C & HEAT SYSTEM-DRIVER'S HTR

PLOTTAGE = 3.18:1

CIRCUIT BREAKER CODE (CB)

Page F : 1

NO.	PAGE	AMPERE	#PREVOST	LOCATION	FUNCTION
CB3	1	70A	561767	BAT JCT CPT	12V FEED RR JCT BOX
CB4	1	90A	560298	BAT JCT CPT	12V FEED FR JCT BOX
CB6	1	90A	560298	BAT JCT CPT	24V FEED RR JCT BOX
CB7	1	90A	560298	BAT JCT CPT	24V FEED FR JCT BOX
CB8	1	105A	560465	BAT JCT CPT	CONDENSER FAN MOTOR
CB9	1	105A	560465	BAT JCT CPT	EVAPORATOR FAN MOTOR
CB10	2	8A	561791	FR JCT PANEL	MASTER SWITCH
CB11	1	25A	561795	BAT JCT PANEL	24V HOT WIRE FEED RR & FR
CB12	15	15A	561793	BAT JCT PANEL	WATER BOOSTER PUMP
CB13	10	8A	561791	BAT JCT PANEL	LUGGAGE CPT LTS
CB16	2	8A	561791	RR JCT BOX	ENGINE-RR CTR & START SW
CB17	1	25A	561795	BAT JCT PANEL	12V HOT WIRE FEED RR & FR
CB18	2	8A	561791	RR JCT BOX	ENGINE-FR CTR SW
CB19	3	15A	561793	RR JCT BOX	DDEC III E.C.M. POWER
CB20	3	15A	561793	RR JCT BOX	DDEC III E.C.M. POWER
CB21	3	6A	561790	RR JCT BOX	DDEC III 12V IGNITION
CB22	27	15A	561793	GALLEY	GALLEY BATTERY CHARGER
CB23	26-27	8A	560828	GALLEY	GALLEY CONTAINER RH
CB24	26-27	8A	560828	GALLEY	GALLEY CONTAINER LH
CB25	26-27	6A	560827	GALLEY	GALLEY LAMP
CB26	8	10A	561792	RR JCT BOX	BACK-UP LTS & ALARM
CB27	5	8A	561791	FR JCT PANEL	24V IGN DASH ACCESSORIES
CB29	5	20A	561794	FR JCT PANEL	ELECTRICAL HORNS
CB30	5	10A	561793	FR JCT PANEL	FIRE ALARM & WATER HTR TIMER
CB31	5	8A	561791	FR JCT PANEL	AIR DRYER
CB32	5	6A	561790	BAT JCT PANEL	LOW FUEL WARNING LT
CB35	6	6A	561790	FR JCT PANEL	FOG & HAZARD SW
CB36	6	15A	561793	FR JCT PANEL	FOG LTS
CB37	6	8A	561791	FR JCT PANEL	HEAD & MULTI-FUNC. SW
CB38	6	10A	561792	FR JCT PANEL	MARKER LTS
CB39	19	6A	561790	FR JCT PANEL	DASHBOARD - SPEEDO & TACHO
CB40	6	8A	561791	FR JCT PANEL	FR & RR CLEARANCE & ID. LTS
CB42	6	10A	561792	FR JCT PANEL	RR MARKER,TAIL,LICENCE LTS
CB43	6	20A	561794	FR JCT PANEL	HEADLAMP (HI)
CB44	6	15A	561793	FR JCT PANEL	HEADLAMP (LO)
CB45	7	10A	561792	FR JCT PANEL	MULTI-FUNC. SW (WIPER CTR)
CB48	8	6A	561790	FR JCT PANEL	STOP SW
CB49	8	15A	561793	RR JCT BOX	LH STOP LTS
CB50	11	6A	561790	RR JCT BOX	HAT RACK LIGHTING
CB51	8	20A	561794	FR JCT PANEL	RH STOP & CYCLOP LTS
CB52	14	6A	561790	FR JCT PANEL	HOSTESS & PASSENGER CHIME
CB55	11	10A	561792	FR JCT PANEL	AISLE LTS
CB56	11	8A	561791	RR JCT BOX	EMERGENCY EXIT LTS
CB59	12	8A	561791	FR JCT PANEL	DRIVER'S LTS SW.
CB60	12	15A	561793	RR JCT BOX	READING LTS LH
CB61	12	15A	561793	RR JCT BOX	READING LTS RH
CB63	13	8A	562293	FR SERVICE CPT	110V FLUORESCENT LH
CB64	13	8A	562293	FR SERVICE CPT	110V FLUORESCENT RH
CB65	13	15A	561793	RR JCT BOX	24V FLUORESCENT RH
CB66	13	15A	561793	RR JCT BOX	24V FLUORESCENT LH
CB67	16	10A	561792	A/C AUX UNIT	AUXILIARY A/C FAN
CB68	16	10A	561792	A/C AUX UNIT	AUXILIARY A/C FAN
CB70	15-16	8A	561791	FR JCT PANEL	BLOWER CUT-IN RELAY
CB71	16	8A	561791	A/C AUX UNIT	AUXILIARY A/C TEMP CTRL
CB72	16	6A	561790	RR JCT BOX	AUXILIARY A/C COMPR. CLUTCH
CB74	16	20A	561794	RR JCT BOX	AUXILIARY A/C UNIT POWER
CB75	26-27	20A	561794	RR JCT BOX	GALLEY
CB79	15-16	10A	561792	FR JCT PANEL	DRIVER'S HTR FAN

CIRCUIT BREAKER CODE (CB)

Page F : 1

NO.	PAGE	AMPERE	#PREVOST	LOCATION	FUNCTION
CB83	4	20A	561794	RR JCT BOX	WORLD TRANSMISSION VIM POWER
CB86	20	8A	561791	RR JCT BOX	LAVATORY PUMP
CB89	20	8A	561791	RR JCT BOX	LAVATORY LIGHTING
CB92	19	6A	561790	FR JCT PANEL	SPEED SW & KNEELING SYST.
CB94	12	8A	561791	FR JCT PANEL	READING LTS & GENERAL LTS MAIN SW
CB102	28-29	10A	561792	FR JCT PANEL	SOUND SYSTEM
CB104	24	6A	561790	FR JCT PANEL	ABS E.C.U.
CB105	24	20A	561794	FR JCT PANEL	ABS E.C.U.
CB106	24	10A	561792	FR SERV JCT BOX	ABS E.C.U.
CB107	24	10A	561792	FR SERV JCT BOX	ABS E.C.U.
CB109	20	8A	561791	RR JCT BOX	LAVATORY EXH.FAN
CB117	18	8A	561791	FR JCT PANEL	RR VIEW MIRROR
CB118	22	20A	561794	FR JCT PANEL	LUGGAGE DOOR LOCK MOTOR
CB119	22	3A	561797	FR JCT PANEL	LUGGAGE UNLOCK TT LT & SW
CB120	22	20A	561794	FR JCT PANEL	LUGGAGE DOOR LOCK MOTOR
CB121	18	10A	561792	FR JCT PANEL	CIGAR LIGHTER
CB125	7	20A	561794	FR JCT PANEL	DIRECTIONAL LTS LH
CB126	7	20A	561794	FR JCT PANEL	DIRECTIONAL LTS RH
CB129	17	15A	561793	RR JCT BOX	WATER HEATER
CB130	5	6A	561790	RR JCT BOX	FAN CLUTCH RADIATOR
CB132	17	15A	561793	RR JCT BOX	WATER HEATER

PLOTTAGE = 3.18:1

CIRCUIT BREAKER CODE (CB)

Page F :1

NO.	PAGE	AMPERE	#PREVOST	LOCATION	FUNCTION
CB3	1	70A	561767	BAT JCT CPT	12V FEED RR JCT BOX
CB4	1	90A	560298	BAT JCT CPT	12V FEED FR JCT BOX
CB6	1	90A	560298	BAT JCT CPT	24V FEED RR JCT BOX
CB7	1	90A	560298	BAT JCT CPT	24V FEED FR JCT BOX
CB8	1	105A	560465	BAT JCT CPT	CONDENSER FAN MOTOR
CB9	1	105A	560465	BAT JCT CPT	EVAPORATOR FAN MOTOR
CB10	2	8A	561791	FR JCT PANEL	MASTER SWITCH
CB11	1	25A	561795	BAT JCT PANEL	24V HOT WIRE FEED RR & FR
CB12	15	15A	561793	BAT JCT PANEL	WATER BOOSTER PUMP
CB13	10	8A	561791	BAT JCT PANEL	LUGGAGE CPT LTS
CB16	2	8A	561791	RR JCT BOX	ENGINE-RR CTR & START SW
CB17	1	25A	561795	BAT JCT PANEL	12V HOT WIRE FEED RR & FR
CB18	2	6A	561791	RR JCT BOX	ENGINE-FR CTR SW
CB19	3	15A	561793	RR JCT BOX	DDEC III E.C.M. POWER
CB20	3	15A	561793	RR JCT BOX	DDEC III E.C.M. POWER
CB21	3	6A	561790	RR JCT BOX	DDEC III 12V IGNITION
CB22	27	15A	561793	GALLEY	GALLEY BATTERY CHARGER
CB23	26-27	8A	560828	GALLEY	GALLEY CONTAINER RH
CB24	26-27	8A	560828	GALLEY	GALLEY CONTAINER LH
CB25	26-27	6A	560827	GALLEY	GALLEY LAMP
CB26	8	10A	561792	RR JCT BOX	BACK-UP LTS & ALARM
CB27	5	8A	561791	FR JCT PANEL	24V IGN DASH ACCESSORIES
CB29	5	20A	561794	FR JCT PANEL	ELECTRICAL HORNS
CB30	5	10A	561793	FR JCT PANEL	FIRE ALARM & WATER HTR TIMER
CB31	5	8A	561791	FR JCT PANEL	AIR DRYER
CB32	5	6A	561790	BAT JCT PANEL	LOW FUEL WARNING LT
CB35	6	6A	561790	FR JCT PANEL	FOG & HAZARD SW
CB36	6	15A	561793	FR JCT PANEL	FOG LTS
CB37	6	8A	561791	FR JCT PANEL	HEAD & MULTI-FUNC. SW
CB38	6	10A	561792	FR JCT PANEL	MARKER LTS
CB39	19	6A	561790	FR JCT PANEL	DASHBOARD - SPEEDO & TACHO
CB40	6	8A	561791	FR JCT PANEL	FR & RR CLEARANCE & ID. LTS
CB42	6	10A	561792	FR JCT PANEL	RR MARKER,TAIL,LICENCE LTS
CB43	6	20A	561794	FR JCT PANEL	HEADLAMP (HI)
CB44	6	15A	561793	FR JCT PANEL	HEADLAMP (LO)
CB45	7	10A	561792	FR JCT PANEL	MULTI-FUNC. SW (WIPER CTR)
CB48	8	6A	561790	FR JCT PANEL	STOP SW
CB49	8	15A	561793	RR JCT BOX	LH STOP LTS
CB50	11	6A	561790	RR JCT BOX	HAT RACK LIGHTING
CB51	8	20A	561794	FR JCT PANEL	RH STOP & CYCLOP LTS
CB52	14	6A	561790	FR JCT PANEL	HOSTESS & PASSENGER CHIME
CB55	11	10A	561792	FR JCT PANEL	AISLE LTS
CB56	11	8A	561791	RR JCT BOX	EMERGENCY EXIT LTS
CB59	12	8A	561791	FR JCT PANEL	DRIVER'S LTS SW.
CB60	12	15A	561793	RR JCT BOX	READING LTS LH
CB61	12	15A	561793	RR JCT BOX	READING LTS RH
CB63	13	8A	562293	FR SERVICE CPT	110V FLUORESCENT LH
CB64	13	8A	562293	FR SERVICE CPT	110V FLUORESCENT RH
CB65	13	15A	561793	RR JCT BOX	24V FLUORESCENT RH
CB66	13	15A	561793	RR JCT BOX	24V FLUORESCENT LH
CB67	16	10A	561792	A/C AUX UNIT	AUXILIARY A/C FAN
CB68	16	10A	561792	A/C AUX UNIT	AUXILIARY A/C FAN
CB70	15-16	8A	561791	FR JCT PANEL	BLOWER CUT-IN RELAY
CB71	16	8A	561791	A/C AUX UNIT	AUXILIARY A/C TEMP CTRL
CB72	16	6A	561790	RR JCT BOX	AUXILIARY A/C COMPR. CLUTCH
CB74	16	20A	561794	RR JCT BOX	AUXILIARY A/C UNIT POWER
CB75	26-27	20A	561794	RR JCT BOX	GALLEY
CB79	15-16	10A	561792	FR JCT PANEL	DRIVER'S HTR FAN

CIRCUIT BREAKER CODE (CB) Page F :1

NO.	PAGE	AMPERE	#PREVOST	LOCATION	FUNCTION
CB83	4	20A	561794	RR JCT BOX	WORLD TRANSMISSION VIM POWER
CB86	20	8A	561791	RR JCT BOX	LAVATORY PUMP
CB89	20	8A	561791	RR JCT BOX	LAVATORY LIGHTING
CB92	19	6A	561790	FR JCT PANEL	SPEED SW & KNEELING SYST.
CB94	12	8A	561791	FR JCT PANEL	READING LTS & GENERAL LTS MAIN SW
CB102	28-29	10A	561792	FR JCT PANEL	SOUND SYSTEM
CB104	24	6A	561790	FR JCT PANEL	ABS E.C.U.
CB105	24	20A	561794	FR JCT PANEL	ABS E.C.U.
CB106	24	10A	561792	FR SERV JCT BOX	ABS E.C.U.
CB107	24	10A	561792	FR SERV JCT BOX	ABS E.C.U.
CB109	20	8A	561791	RR JCT BOX	LAVATORY EXH.FAN
CB117	18	8A	561791	FR JCT PANEL	RR VIEW MIRROR
CB118	22	20A	561794	FR JCT PANEL	LUGGAGE DOOR LOCK MOTOR
CB119	22	3A	561797	FR JCT PANEL	LUGGAGE UNLOCK TT LT & SW
CB120	22	20A	561794	FR JCT PANEL	LUGGAGE DOOR LOCK MOTOR
CB121	18	10A	561792	FR JCT PANEL	CIGAR LIGHTER
CB125	7	20A	561794	FR JCT PANEL	DIRECTIONAL LTS LH
CB126	7	20A	561794	FR JCT PANEL	DIRECTIONAL LTS RH
CB129	17	15A	561793	RR JCT BOX	WATER HEATER
CB130	5	6A	561790	RR JCT BOX	FAN CLUTCH RADIATOR
CB132	17	15A	561793	RR JCT BOX	WATER HEATER

CIRCUIT BREAKER CODE (CB) Page F :1

NO.	PAGE	AMPERE	*PREVOST	LOCATION	FUNCTION
CB3	1	70A	561767	BAT JCT CPT	12V FEED RR JCT BOX
CB4	1	90A	560298	BAT JCT CPT	12V FEED FR JCT BOX
CB6	1	90A	560298	BAT JCT CPT	24V FEED RR JCT BOX
CB7	1	90A	560298	BAT JCT CPT	24V FEED FR JCT BOX
CB8	1	105A	560465	BAT JCT CPT	CONDENSER FAN MOTOR
CB9	1	105A	560465	BAT JCT CPT	EVAPORATOR FAN MOTOR
CB10	2	8A	561791	FR JCT PANEL	MASTER SWITCH
CB11	1	25A	561795	BAT JCT PANEL	24V HOT WIRE FEED RR & FR
CB12	15	15A	561793	BAT JCT PANEL	WATER BOOSTER PUMP
CB13	10	8A	561791	BAT JCT PANEL	LUGGAGE CPT LTS
CB16	2	8A	561791	RR JCT BOX	ENGINE-RR CTR & START SW
CB17	1	25A	561795	BAT JCT PANEL	12V HOT WIRE FEED RR & FR
CB18	2	6A	561791	RR JCT BOX	ENGINE-FR CTR SW
CB19	3	15A	561793	RR JCT BOX	DDEC III E.C.M. POWER
CB20	3	15A	561793	RR JCT BOX	DDEC III E.C.M. POWER
CB21	3	6A	561790	RR JCT BOX	DDEC III 12V IGNITION
CB22	27	15A	561793	GALLEY	GALLEY BATTERY CHARGER
CB23	26-27	8A	560828	GALLEY	GALLEY CONTAINER RH
CB24	26-27	8A	560828	GALLEY	GALLEY CONTAINER LH
CB25	26-27	6A	560827	GALLEY	GALLEY LAMP
CB26	8	10A	561792	RR JCT BOX	BACK-UP LTS & ALARM
CB27	5	8A	561791	FR JCT PANEL	24V IGN DASH ACCESSORIES
CB29	5	20A	561794	FR JCT PANEL	ELECTRICAL HORNS
CB30	5	10A	561792	FR JCT PANEL	FIRE ALARM & WATER HTR TIMER
CB31	5	8A	561791	FR JCT PANEL	AIR DRYER
CB32	5	6A	561790	BAT JCT PANEL	LOW FUEL WARNING LT
CB35	6	6A	561790	FR JCT PANEL	FOG & HAZARD SW
CB36	6	15A	561793	FR JCT PANEL	FOG LTS
CB37	6	8A	561791	FR JCT PANEL	HEAD & MULTI-FUNC. SW
CB38	6	10A	561792	FR JCT PANEL	MARKER LTS
CB39	19	6A	561790	FR JCT PANEL	DASHBOARD - SPEEDO & TACHO
CB40	6	8A	561791	FR JCT PANEL	FR & RR CLEARANCE & ID. LTS
CB42	6	10A	561792	FR JCT PANEL	RR MARKER,TAIL,LICENCE LTS
CB43	6	20A	561794	FR JCT PANEL	HEADLAMP (HI)
CB44	6	15A	561793	FR JCT PANEL	HEADLAMP (LO)
CB45	7	10A	561792	FR JCT PANEL	MULTI-FUNC. SW (WIPER CTR)
CB48	8	6A	561790	FR JCT PANEL	STOP SW
CB49	8	15A	561793	RR JCT BOX	LH STOP LTS
CB50	11	6A	561790	RR JCT BOX	HAT RACK LIGHTING
CB51	8	20A	561794	FR JCT PANEL	RH STOP & CYCLOP LTS
CB52	14	6A	561790	FR JCT PANEL	HOSTESS & PASSENGER CHIME
CB55	11	10A	561792	FR JCT PANEL	AISLE LTS
CB56	11	8A	561791	RR JCT BOX	EMERGENCY EXIT LTS
CB59	12	8A	561791	FR JCT PANEL	DRIVER'S LTS SW.
CB60	12	15A	561793	RR JCT BOX	READING LTS LH
CB61	12	15A	561793	RR JCT BOX	READING LTS RH
CB63	13	8A	562293	FR SERVICE CPT	110V FLUORESCENT LH
CB64	13	8A	562293	FR SERVICE CPT	110V FLUORESCENT RH
CB65	13	15A	561793	RR JCT BOX	24V FLUORESCENT RH
CB66	13	15A	561793	RR JCT BOX	24V FLUORESCENT LH
CB67	16	10A	561792	A/C AUX UNIT	AUXILIARY A/C FAN
CB68	16	10A	561792	A/C AUX UNIT	AUXILIARY A/C FAN
CB70	15-16	8A	561791	FR JCT PANEL	BLOWER CUT-IN RELAY
CB71	16	8A	561791	A/C AUX UNIT	AUXILIARY A/C TEMP CTRL
CB72	16	6A	561790	RR JCT BOX	AUXILIARY A/C COMPR. CLUTCH
CB74	16	20A	561794	RR JCT BOX	AUXILIARY A/C UNIT POWER
CB75	26-27	20A	561794	RR JCT BOX	GALLEY
CB79	15-16	10A	561792	FR JCT PANEL	DRIVER'S HTR FAN
CB83	4	20A	561794	RR JCT BOX	WORLD TRANSMISSION VIM POWER

CIRCUIT BREAKER CODE (CB) Page F :1

NO.	PAGE	AMPERE	*PREVOST	LOCATION	FUNCTION
CB86	20	8A	561791	RR JCT BOX	LAVATORY PUMP
CB89	20	8A	561791	RR JCT BOX	LAVATORY LIGHTING
CB90	1	30A	870690	BAT JCT PANEL	12V SOUND SYSTEM
CB91	1	30A	870690	BAT JCT PANEL	24V SOUND SYSTEM
CB92	19	6A	561790	FR JCT PANEL	SPEED SW & KNEELING SYST.
CB94	12	8A	561791	FR JCT PANEL	READING LTS & GENERAL LTS MAIN SW
CB95	28	10A	561792	SND SYS JCT PAN	24V AMPLIFEEDING
CB96	28	10A	561792	SND SYS JCT PAN	24V VIDEO SYSTEM
CB97	28	10A	561792	SND SYS JCT PAN	24V B/U AMPLIFEEDING
CB98	28	10A	561792	SND SYS JCT PAN	12V RADIO FEEDING
CB102	28-29	10A	561792	FR JCT PANEL	SOUND SYSTEM *** PRIOR REV 008
CB104	24	6A	561790	FR JCT PANEL	ABS E.C.U.
CB105	24	20A	561794	FR JCT PANEL	ABS E.C.U.
CB106	24	10A	561792	FR SERV JCT BOX	ABS E.C.U.
CB107	24	10A	561792	FR SERV JCT BOX	ABS E.C.U.
CB109	20	8A	561791	RR JCT BOX	LAVATORY EXH.FAN
CB117	18	8A	561791	FR JCT PANEL	RR VIEW MIRROR
CB118	22	20A	561794	FR JCT PANEL	LUGGAGE DOOR LOCK MOTOR
CB119	22	3A	561797	FR JCT PANEL	LUGGAGE UNLOCK TT LT & SW
CB120	22	20A	561794	FR JCT PANEL	LUGGAGE DOOR LOCK MOTOR
CB121	18	10A	561792	FR JCT PANEL	CIGAR LIGHTER
CB125	7	20A	561794	FR JCT PANEL	DIRECTIONAL LTS LH
CB126	7	20A	561794	FR JCT PANEL	DIRECTIONAL LTS RH
CB129	17	15A	561793	RR JCT BOX	WATER HEATER
CB130	5	6A	561790	RR JCT BOX	FAN CLUTCH RADIATOR
CB132	17	15A	561793	RR JCT BOX	WATER HEATER

CIRCUIT BREAKER CODE (CB)

NO.	PAGE	AMPERE	•PREVOST	LOCATION	FUNCTION
CB1	1	200A	560838	BAT JCT CPT	A/C FEED
CB3	1	70A	561767	BAT JCT CPT	12V FEED RR JCT BOX
CB4	1	90A	560298	BAT JCT CPT	12V FEED FR JCT BOX
CB5	15	40A	560703	A/C JCT BOX	CONDENSER FAN MOTOR
CB6	1	90A	560298	BAT JCT CPT	24V FEED RR JCT BOX
CB7	1	90A	560298	BAT JCT CPT	24V FEED FR JCT BOX
CB8	15	40A	560703	A/C JCT BOX	CONDENSER FAN MOTOR
CB9	1	105A	560465	BAT JCT CPT	EVAPORATOR FAN MOTOR
CB10	2	8A	561791	FR JCT PANEL	MASTER SWITCH
CB11	1	25A	561795	BAT JCT PANEL	24V HOT WIRE FEED RR & FR
CB12	15	15A	561793	BAT JCT PANEL	WATER BOOSTER PUMP
CB13	10	8A	561791	BAT JCT PANEL	LUGGAGE CPT LTS
CB16	2	8A	561791	RR JCT BOX	ENGINE-RR CTR & START SW
CB17	1	25A	561795	BAT JCT PANEL	12V HOT WIRE FEED RR & FR
CB18	2	6A	561791	RR JCT BOX	ENGINE-FR CTR SW
CB19	3	15A	561793	RR JCT BOX	DDEC III E.C.M. POWER
CB20	3	15A	561793	RR JCT BOX	DDEC III E.C.M. POWER
CB21	3	6A	561790	RR JCT BOX	DDEC III 12V IGNITION
CB22	27	15A	561793	GALLEY	GALLEY BATTERY CHARGER
CB23	26-27	8A	560828	GALLEY	GALLEY CONTAINER RH
CB24	26-27	8A	560828	GALLEY	GALLEY CONTAINER LH
CB25	26-27	6A	560827	GALLEY	GALLEY LAMP
CB26	8	10A	561792	RR JCT BOX	BACK-UP LTS & ALARM
CB27	5	8A	561791	FR JCT PANEL	24V IGN DASH ACCESSORIES
CB29	5	20A	561794	FR JCT PANEL	ELECTRICAL HORNS
CB30	5	10A	561792	FR JCT PANEL	FIRE ALARM & WATER HTR TIMER
CB31	5	8A	561791	FR JCT PANEL	AIR DRYER
CB35	6	6A	561790	FR JCT PANEL	FOG & HAZARD SW
CB36	6	15A	561793	FR JCT PANEL	FOG LTS
CB37	6	8A	561791	FR JCT PANEL	HEAD & MULTI-FUNC. SW
CB38	6	10A	561792	FR JCT PANEL	MARKER LTS
CB39	19	6A	561790	FR JCT PANEL	DASHBOARD - SPEEDO & TACHO
CB40	6	8A	561791	FR JCT PANEL	FR & RR CLEARANCE & ID. LTS
CB42	6	10A	561792	FR JCT PANEL	RR MARKER.TAIL.LICENCE LTS
CB43	6	20A	561794	FR JCT PANEL	HEADLAMP (HI)
CB44	6	15A	561793	FR JCT PANEL	HEADLAMP (LO)
CB45	7	10A	561792	FR JCT PANEL	MULTI-FUNC. SW (WIPER CTR)
CB48	8	6A	561790	FR JCT PANEL	STOP SW
CB49	8	15A	561793	RR JCT BOX	LH STOP LTS
CB50	11	6A	561790	RR JCT BOX	HAT RACK LIGHTING
CB51	8	20A	561794	FR JCT PANEL	RH STOP & CYCLOP LTS
CB52	14	6A	561790	FR JCT PANEL	HOSTESS & PASSENGER CHIME
CB55	11	10A	561792	FR JCT PANEL	AISLE LTS
CB56	11	8A	561791	RR JCT BOX	EMERGENCY EXIT LTS
CB59	12	8A	561791	FR JCT PANEL	DRIVER'S LTS SW.
CB60	12	15A	561793	RR JCT BOX	READING LTS LH
CB61	12	15A	561793	RR JCT BOX	READING LTS RH
CB63	13	8A	562293	FR SERVICE CPT	110V FLUORESCENT LH
CB64	13	8A	562293	FR SERVICE CPT	110V FLUORESCENT RH
CB65	13	15A	561793	RR JCT BOX	24V FLUORESCENT RH
CB66	13	15A	561793	RR JCT BOX	24V FLUORESCENT LH
CB67	16	10A	561792	A/C AUX UNIT	AUXILIARY A/C FAN
CB68	16	10A	561792	A/C AUX UNIT	AUXILIARY A/C FAN
CB70	15-16	8A	561791	FR JCT PANEL	BLOWER CUT-IN RELAY
CB71	16	8A	561791	A/C AUX UNIT	AUXILIARY A/C TEMP CTRL
CB72	16	6A	561790	RR JCT BOX	AUXILIARY A/C COMPR. CLUTCH
CB74	16	20A	561794	RR JCT BOX	AUXILIARY A/C UNIT POWER

CIRCUIT BREAKER CODE (CB)

PAGE F : 1

NO.	PAGE	AMPERE	•PREVOST	LOCATION	FUNCTION
CB75	26-27	20A	561794	RR JCT BOX	GALLEY
CB79	15	10A	561792	FR JCT PANEL	DRIVER'S HTR FAN
CB83	4	20A	561794	RR JCT BOX	WORLD TRANSMISSION VIM POWER
CB86	20	8A	561791	RR JCT BOX	LAVATORY PUMP
CB89	20	8A	561791	RR JCT BOX	LAVATORY LIGHTING
CB90	1	30A	870690	BAT JCT PANEL	12V SOUND SYSTEM
CB91	1	30A	870690	BAT JCT PANEL	24V SOUND SYSTEM
CB92	19	6A	561790	FR JCT PANEL	SPEED SW & KNEELING SYST.
CB94	12	8A	561791	FR JCT PANEL	READING LTS & GENERAL LTS MAIN SW
CB95	28	10A	561792	SND SYS JCT PAN	24V AMPLI FEEDING
CB96	28	10A	561792	SND SYS JCT PAN	24V VIDEO SYSTEM
CB97	28	10A	561792	SND SYS JCT PAN	24V B/U AMPLI FEEDING
CB98	28	10A	561792	SND SYS JCT PAN	12V RADIO FEEDING
CB102	28-29	10A	561792	FR JCT PANEL	SOUND SYSTEM *** PRIOR REV 008
CB104	24	6A	561790	FR JCT PANEL	ABS E.C.U.
CB105	24	20A	561794	FR JCT PANEL	ABS E.C.U.
CB106	24	10A	561792	FR SERV JCT BOX	ABS E.C.U.
CB107	24	10A	561792	FR SERV JCT BOX	ABS E.C.U.
CB109	20	8A	561791	RR JCT BOX	LAVATORY EXH.FAN
CB117	18	8A	561791	FR JCT PANEL	RR VIEW MIRROR
CB118	22	20A	561794	FR JCT PANEL	LUGGAGE DOOR LOCK MOTOR
CB119	22	3A	561797	FR JCT PANEL	LUGGAGE UNLOCK TT LT & SW
CB120	22	20A	561794	FR JCT PANEL	LUGGAGE DOOR LOCK MOTOR
CB121	18	10A	561792	FR JCT PANEL	CIGAR LIGHTER
CB125	7	20A	561794	FR JCT PANEL	DIRECTIONAL LTS LH
CB126	7	20A	561794	FR JCT PANEL	DIRECTIONAL LTS RH
CB129	17	15A	561793	RR JCT BOX	WATER HEATER
CB130	5	6A	561790	RR JCT BOX	FAN CLUTCH RADIATOR
CB132	17	15A	561793	RR JCT BOX	WATER HEATER

CIRCUIT BREAKER CODE (CB)

NO.	PAGE	AMPERE	•PREVOST	LOCATION	FUNCTION
CB1	1	200A	560838	BAT JCT CPT	A/C FEED
CB3	1	70A	561767	BAT JCT CPT	12V FEED RR JCT BOX
CB4	1	90A	560298	BAT JCT CPT	12V FEED FR JCT BOX
CB5	15	40A	560703	A/C JCT BOX	CONDENSER FAN MOTOR
CB6	1	90A	560298	BAT JCT CPT	24V FEED RR JCT BOX
CB7	1	90A	560298	BAT JCT CPT	24V FEED FR JCT BOX
CB8	15	40A	560703	A/C JCT BOX	CONDENSER FAN MOTOR
CB9	1	105A	560465	A/C JCT BOX	EVAPORATOR FAN MOTOR
CB10	2	8A	561791	FR JCT PANEL	MASTER SWITCH
CB11	1	25A	561795	BAT JCT PANEL	24V HOT WIRE FEED RR & FR
CB12	15	15A	561793	BAT JCT PANEL	WATER BOOSTER PUMP
CB13	10	8A	561791	BAT JCT PANEL	LUGGAGE CPT LTS
CB16	2	8A	561791	RR JCT BOX	ENGINE-RR CTR & START SW
CB17	1	25A	561795	BAT JCT PANEL	12V HOT WIRE FEED RR & FR
CB18	2	6A	561791	RR JCT BOX	ENGINE-FR CTR SW
CB19	3	15A	561793	BAT JCT. PANEL	DDEC III E.C.M. POWER
CB20	3	15A	561793	BAT JCT. PANEL	DDEC III E.C.M. POWER
CB21	3	6A	561790	BAT JCT. PANEL	DDEC III 12V IGNITION
CB22	27	15A	561793	GALLEY	GALLEY BATTERY CHARGER
CB23	26-27	8A	560828	GALLEY	GALLEY CONTAINER RH
CB24	26-27	8A	560828	GALLEY	GALLEY CONTAINER LH
CB25	26-27	6A	560827	GALLEY	GALLEY LAMP
CB26	8	10A	561792	RR JCT BOX	BACK-UP LTS & ALARM
CB27	5	8A	561791	FR JCT PANEL	24V IGN DASH ACCESSORIES
CB29	5	20A	561794	FR JCT PANEL	ELECTRICAL HORNS
CB30	5	10A	561792	FR JCT PANEL	FIRE ALARM & WATER HTR TIMER
CB31	5	8A	561791	FR JCT PANEL	AIR DRYER
CB35	6	6A	561790	FR JCT PANEL	FOG & HAZARD SW
CB36	6	15A	561793	FR JCT PANEL	FOG LTS
CB37	6	8A	561791	FR JCT PANEL	HEAD & MULTI-FUNC. SW
CB38	6	10A	561792	FR JCT PANEL	MARKER LTS
CB39	19	6A	561790	FR JCT PANEL	DASHBOARD - SPEEDO & TACHO
CB40	6	8A	561791	FR JCT PANEL	FR & RR CLEARANCE & ID. LTS
CB42	6	10A	561792	FR JCT PANEL	RR MARKER,TAIL,LICENCE LTS
CB43	6	20A	561794	FR JCT PANEL	HEADLAMP (HI)
CB44	6	15A	561793	FR JCT PANEL	HEADLAMP (LO)
CB45	7	10A	561792	FR JCT PANEL	MULTI-FUNC. SW (WIPER CTR)
CB48	8	6A	561790	FR JCT PANEL	STOP SW
CB49	8	15A	561793	RR JCT BOX	LH STOP LTS
CB50	11	6A	561790	RR JCT BOX	HAT RACK LIGHTING
CB51	8	20A	561794	FR JCT PANEL	RH STOP & CYCLOP LTS
CB52	14	6A	561790	FR JCT PANEL	HOSTESS & PASSENGER CHIME
CB55	11	10A	561792	FR JCT PANEL	AISLE LTS
CB56	11	8A	561791	RR JCT BOX	EMERGENCY EXIT LTS
CB59	12	8A	561791	FR JCT PANEL	DRIVER'S LTS SW.
CB60	12	15A	561793	RR JCT BOX	READING LTS LH
CB61	12	15A	561793	RR JCT BOX	READING LTS RH
CB63	13	8A	562293	FR SERVICE CPT	110V FLUORESCENT LH
CB64	13	8A	562293	FR SERVICE CPT	110V FLUORESCENT RH
CB65	13	15A	561793	RR JCT BOX	24V FLUORESCENT RH
CB66	13	15A	561793	RR JCT BOX	24V FLUORESCENT LH
CB67	16	10A	561792	A/C AUX UNIT	AUXILIARY A/C FAN
CB68	16	10A	561792	A/C AUX UNIT	AUXILIARY A/C FAN
CB70	15-16	8A	561791	FR JCT PANEL	BLOWER CUT-IN RELAY
CB71	16	8A	561791	A/C AUX UNIT	AUXILIARY A/C TEMP CTRL
CB72	16	6A	561790	RR JCT BOX	AUXILIARY A/C COMPR. CLUTCH
CB74	16	20A	561794	RR JCT BOX	AUXILIARY A/C UNIT POWER

CIRCUIT BREAKER CODE (CB)

PAGE F : 1

NO.	PAGE	AMPERE	•PREVOST	LOCATION	FUNCTION
CB75	26-27	20A	561794	RR JCT BOX	GALLEY
CB79	15	10A	561792	FR JCT PANEL	DRIVER'S HTR FAN
CB83	4	20A	561794	RR JCT BOX	WORLD TRANSMISSION VIM POWER
CB86	20	8A	561791	RR JCT BOX	LAVATORY PUMP
CB89	20	8A	561791	RR JCT BOX	LAVATORY LIGHTING
CB90	1	30A	870690	BAT JCT PANEL	12V SOUND SYSTEM
CB91	1	30A	870690	BAT JCT PANEL	24V SOUND SYSTEM
CB92	19	6A	561790	FR JCT PANEL	SPEED SW & KNEELING SYST.
CB94	12	8A	561791	FR JCT PANEL	READING LTS & GENERAL LTS MAIN SW
CB95	28	10A	561792	SND SYS JCT PAN	24V AMPLI FEEDING
CB96	28	10A	561792	SND SYS JCT PAN	24V VIDEO SYSTEM
CB97	28	10A	561792	SND SYS JCT PAN	24V B/U AMPLI FEEDING
CB98	28	10A	561792	SND SYS JCT PAN	12V RADIO FEEDING
CB102	28-29	10A	561792	FR JCT PANEL	SOUND SYSTEM *** PRIOR REV 008
CB104	24	6A	561790	FR JCT PANEL	ABS E.C.U.
CB105	24	20A	561794	FR JCT PANEL	ABS E.C.U.
CB106	24	10A	561792	FR SERV JCT BOX	ABS E.C.U.
CB107	24	10A	561792	FR SERV JCT BOX	ABS E.C.U.
CB109	20	8A	561791	RR JCT BOX	LAVATORY EXH.FAN
CB117	18	8A	561791	FR JCT PANEL	RR VIEW MIRROR
CB118	22	20A	561794	FR JCT PANEL	LUGGAGE DOOR LOCK MOTOR
CB119	22	3A	561797	FR JCT PANEL	LUGGAGE UNLOCK TT LT & SW
CB120	22	20A	561794	FR JCT PANEL	LUGGAGE DOOR LOCK MOTOR
CB121	18	10A	561792	FR JCT PANEL	CIGAR LIGHTER
CB125	7	20A	561794	FR JCT PANEL	DIRECTIONAL LTS LH
CB126	7	20A	561794	FR JCT PANEL	DIRECTIONAL LTS RH
CB129	17	15A	561793	RR JCT BOX	WATER HEATER
CB130	5	6A	561790	RR JCT BOX	FAN CLUTCH RADIATOR
CB132	17	15A	561793	RR JCT BOX	WATER HEATER

CONNECTORS CODE (C) P∠N/O G : 1

NO.	LOCATION	TYPE	(NB) CAVITY	*PIN HOUSING	*SOCKET HOUSING
C3	UNDER DASH-LH	AMP CPC	37	561645	561646
C7	FR SERVICE COMPT.-CLUTCH SW	ITT SS	3	561111	561080
C8	FR JCT PANEL VCR FEED	AMP MNL	2	561248	561247
C11	LH CONSOLE SW-MIRROR	AMP MNL	3	561667	561550
C12	LH CONSOLE SW-MIRROR HTR	AMP MNL	2	561248	561247
C13	LH CONSOLE SW-MIRROR	AMP MNL	6	561552	561515
C14	UNDER DASH LH-MIRROR	AMP MNL	9	561670	561669
C15	UNDER DASH RH-MIRROR	AMP MNL	9	561670	561669
C18	UNDER DASH-FIRE ALARM	AMP MNL	2	560900	560898
C19	UNDER DASH-A/C & HEAT SYST.	TC	10	561072	561110
C20	RR JCT BOX DIODES	AMP MNL	9	561670	561669
C21	LUGGAGE COMPT.-LOCK DOOR MOT.	PED	2	------	562076
C22	ENGINE COMPT.-CYCLOP LT	PED WP	2	561566	561690
C26	UNDER INSTRUMENT.-PANEL RHEO.	TC	2	561030	560997
C29	FR SERVICE COMPT.-VIM FEED	PED WP	3	561781	561782
C32	RH CONSOLE-DRV TEMP SENSOR	BURNDY	3	------	561104
C33	FRSERVICE COMPT. DDEC VSS	PED WP	2	561566	561690
C34	RH CONSOLE-DRV TEMP CTRL	BURNDY	6	------	561103
C35	RECIRULATED AIR GRILL-SENSER	BURNDY	3	------	561104
C36	LH CONSOLE SW-CRUISE ON/OFF	SWF	8	------	561107
C37	LH CONSOLE SW-CRUISE SET	SWF	8	------	561107
C38	LH CONSOLE SW-CRUISE RESUME	SWF	8	------	561107
C41	UNDER DASH-FLASHER UNIT	TC	2	------	561940
C49	LAVATORY NIGHT LTS	AMP MNL	2	560900	560898
C50	RH CONSOLE-PAS. TEMP CTRL	BURNDY	6	------	561103
C51	RH CONSOLE SW-A/C & HEAT	SWF	8	------	561107
C52	ENGINE COMPT.-COMPRESSOR 05G	PED WP	2	561566	561690
C53	ENGINE COMPT.-COMPRESSOR 05G	PED WP	2	561566	561690
C54	ENGINE COMPT.-COMPRESSOR 05G	TC	1	560098	560697
C61	ENGINE COMPT.-FUEL FILTER	PED WP	2	561566	561690
C67	LH UNDER DASH-AMPLIF. RH SPK	BLAUPUNKT	2	561988	------
C68	LH UNDER DASH-AMPLIF. RH SPK	BLAUPUNKT	2	561988	------
C73	LH SW PANEL-MULTI FUNC. LEV.	AMP FF	8	561188	------
C74	LH SW PANEL-MULTI FUNC. LEV.	AMP FF	6	------	561108
C78	LUGGAGE COMPT.-DOOR LOCK 4 LH	AMP MNL	4	560851	560852
C79	LUGGAGE COMPT.-DOOR LOCK 4 RH	AMP MNL	4	560851	560852
C80	FR JCT PANEL-LUG. DOOR LOCK	AMP MNL	6	561552	561515
C81	LUGGAGE COMPT.-DOOR LOCK 1 LH	AMP MNL	4	560851	560852
C82	LUGGAGE COMPT.-DOOR LOCK 1 RH	AMP MNL	4	560851	560852
C83	UNDER DASH-FLASHER MODULE	TC	10	561072	561110
C84	UNDER DASH-A/C SYSTEM	TC	3	561091	561071
C85	LUGGAGE COMPT.-DOOR LOCK 3 RH	AMP MNL	4	560851	560852
C86	LUGGAGE COMPT.-DOOR LOCK 3 LH	AMP MNL	4	560851	560852
C88	RR END ROOF-CLEARANCE LTS	AMP MNL	2	560900	560898
C90	RR ROOF AUX. A/C THERMOST.	BURNDY	6	------	561103
C91	RR ROOF AUX. A/C TMP SENSOR	BURNDY	6	------	561104
C92	RR ROOF AUX. A/C FAN RH	TC	2	561030	560997
C93	RR ROOF AUX. A/C FAN LH	TC	2	561030	560997
C94	RR ROOF AUX. A/C FAN RES LH	AMP MNL	2	560900	560898
C95	RR ROOF AUX. A/C FAN RES RH	AMP MNL	2	560900	560898
C96	RR ROOF AUX. A/C LIQ SOL VAL	TC	2	561030	560997
C97	RR ROOF AUX. A/C SHUT SOL VAL	AMPHENOL	2	------	560412
C105	UNDER DASH RH-DRV LIQ SOL VL	TC	2	561030	560997
C106	UNDER DASH RH-DRV WTR VALVE	TC	2	561030	560997
C107	UNDER DASH RH-DRV HTR RH FAN	TC	2	561030	560997
C108	UNDER DASH RH-DRV HTR LH FAN	TC	2	561030	560997
C111	LH CONSOLE SW-DRIVER'LTS	SWF	8	------	561107

CONNECTORS CODE (C) P∠N/O G : 1

NO.	LOCATION	TYPE	(NB) CAVITY	*PIN HOUSING	*SOCKET HOUSING
C112	LH CONSOLE SW-GENERAL LTS	SWF	8	------	561107
C114	ENGINE DDEC-SPEED SIGNAL	PED WP	2	561566	561590
C115	RR JCT BOX-ENGINE ACCES.	DEUTSCH	40	562281	562284
C116	DRIVE AXLE COMPT.-AIR DRYER	PED MP	2	------	562251
C119	ENGINE COMPT.-LH LOWER LAMP	PED WP	6	561606	561607
C120	ENGINE COMPT.-LH LOWER LAMP	PED WP	6	561606	561607
C123	HAT RACK-BALLAST RH	AMP MNL	6	561552	561515
C123	HAT RACK-BALLAST RH	AMP MNL	6	561552	561515
C124	HAT RACK-FLUORESCENT	AMP MNL	4	561551	561668
C125	HAT RACK-FLUORESCENT	AMP MNL	4	561551	561668
C126	HAT RACK-READING LTS	AMP MNL	2	560900	560898
C130	LH CONSOLE SW-READING LTS	SWF	8	------	561107
C131	LH CONSOLE SW-LUG.DOOR LOCK	SWF	8	------	561107
C132	LH CONSOLE SW-PAS & HOS CHIME	SWF	8	------	561107
C133	LH CONSOLE SW-JACOB OR RET.	SWF	8	------	561107
C134	LH CONSOLE SW-GALLEY	SWF	8	------	561107
C135	LH SW PANEL-ETHER	SWF	8	------	561107
C136	LH CONSOLE SW-MIRROR HTR	SWF	8	------	561107
C137	RH SW PANEL-HEAD LAMP	SWF	8	------	561107
C138	RH SW PANEL-SPARE	SWF	8	------	561107
C139	RH SW PANEL-FOG LAMP	SWF	8	------	561107
C140	FR JCT PANEL-BAT. HI/LO	AMP MNL	2	560900	560898
C141	ENGINE COMPT.-B/UP ALARM	PED WP	2	561566	561590
C142	FR SERVICE CPT-LH MARKER LTS	ITT SS	3	561111	561080
C143	RR LH HAT RACK-FEEDING	AMP MNL	9	561661	561662
C144	RR RH HAT RACK-FEEDING	AMP MNL	9	561661	561662
C145	RH HAT RACK-BALLAST	AMP MNL	4	560851	560852
C146	FR SERVICE CPT-RH MARKER LTS	ITT SS	3	561111	561080
C147	RR ROOF LH-EMERGENCY EXIT LTS	AMP MNL	2	560900	560898
C148	RR ROOF RH-EMERGENCY EXIT LTS	AMP MNL	2	560900	560898
C149	LH HAT RACK-BALLAST	AMP MNL	4	560851	560852
C150	FR RH HAT RACK-110V FLUOR	AMP MNL	2	561248	561247
C151	FR LH HAT RACK-110V FLUOR	AMP MNL	2	561248	561247
C152	LH HAT RACK-GENERAL LTS	AMP MNL	3	561667	561550
C153	RH HAT RACK-GENERAL LTS	AMP MNL	3	561667	561550
C154	RH SW PANEL-HAZARD	SWF	8	------	561107
C155	LH SW PANEL-FAST IDLE	SWF	8	------	561107
C156	LH SW PANEL-STP ENG. OVER.	SWF	8	------	561107
C158	RR ROOF AUX. A/C FEEDING	AMP MNL	3	561667	561550
C160	FR SERVICE CPT-INTERFACE	AMP CPC	37	561644	561646
C161	ENGINE DDEC III-ECM	PED	30	------	561600
C162	ENGINE DDEC III-ACCESSORIES	PED WP	4	561610	561611
C163	ENGINE CPT-COOLANT PROBE	PED MP	2	------	562350
C164	FR SERVICE JCT BOX	AMP CPC	22	561709	561710
C165	FR SERVICE JCT BOX	AMP CPC	16	561693	561695
C166	UNDER INSTRUMENT PANEL	AMP CPC	16	561639	561640
C167	FR SERVICE CPT-ELL. FOOT PEDAL	PED WP	3	561781	561782
C168	FR SERVICE CPT-DDR	DEUTSCH	6	562360	------
C169	FR SERVICE CPT-WORLD TR. VIW	AMP CPC	16	561638	561640
C172	ENGINE COMPT-WATER TANK HEAT.	PED WP	2	561566	561690
C173	LAV.POTABLE-WATER TANK HEAT.	AMP MNL	2	560900	560898
C175	FR SERV CPT-KNEELING FEEDING	PED WP	3	561781	561782
C177	GALLEY-REFRIGERATOR	AMP MNL	2	561248	561247
C179	RH HAT RACK-110V MONITOR	MOLEX	4	561477	561476
C181	FR SERV CPT-KNEELING MODULE	AMP MNL	12	561735	561734
C182	FR SERVICE CPT-SPEED SW	AMP HDP	15	------	562012
C184	FR SERV CPT-KNEEL. MOD. CTRL	AMP MNL	3	------	561550
C184	FR AXLE-KNEELING PROXIMITY SW	AMP MNL	3	561667	561550
C185	FR SERV CPT-KNEEL. MOD. EXH.	AMP MNL	3	------	561550

PREVOST CAR inc. | WIRING DIAGRAM | NO: D060871 | P. G 1/2 | REVISION 000

CONNECTORS CODE (C) P∠N/O G : 2

NO.	LOCATION	TYPE	(NB) CAVITY	*PIN HOUSING	*SOCKET HOUSING
C187	FR SERV CPT-KNEEL. MOD. BRK	AMP MNL	3	------	561550
C187	FR SERVICE JCT BOX-RESISTORS	AMP MNL	6	561552	561515
C188	LH CONSOLE SW-KNEELING	SWF	8	------	561107
C190	FR SERVICE CPT.-WORLD TR VIM	PED WP	30	------	561600
C192	GALLEY-FEEDING	AMP CPC	3	561862	561847
C194	GALLEY SW-CONTAINER RH	SWF	8	------	561107
C195	GALLEY SW-CONTAINER LH	SWF	8	------	561107
C199	FR SERV. JCT BOX-SERVICE BRK	AMP MNL	3	561667	561550
C200	LH CONSOLE SW-24V FLUOR	SWF	8	------	561107
C201	UNDER INSTRUMENT PANEL	AMP MNL	2	560900	560898
C202	UNDER INSTRUMENT PANEL	AMP CPC	9	561636	561637
C205	LH UNDER DASH-AMPLIF. LH SPK	BLAUPUNKT	2	561988	------
C206	RH CONSOLE-FR DEFROSTER	TC	2	561030	560997
C207	RH CONSOLE-DRV RHEOSTAT	AMP MNL	6	561552	561515
C208	UNDER DASH-DRV HTR MODULE	AMP MNL	9	561670	561669
C209	UNDER DASH-DRV HTR MODULE	AMP MNL	9	561670	561669
C210	LH UNDER DASH-AMPLIF. LH SPK	BLAUPUNKT	2	561988	------
C211	RH CONSOLE-VCR VOLUME	AMP MNL	4	561551	561668
C212	LH CONSOLE SW-VCR VIDEO	SWF	8	------	561107
C213	FR ROOF-CLEARANCE LT	AMP MNL	2	560900	560898
C214	UNDER DASH PANEL-TACHOGRAPH	V.D.O.	8	------	562041
C215	UNDER DASH PANEL-TACHOGRAPH	V.D.O.	8	------	562043
C216	UNDER DASH PANEL-TACHOGRAPH	AMP MNL	4	560851	560852
C217	FR LH HAT RACK-SPEAKER	AMP MNL	4	561659	561660
C218	FR RH HAT RACK-SPEAKER	AMP MNL	4	561659	561660
C219	DASH RHEOSTAT-P.A. VOLUME	MOLEX	4	561477	561476
C220	LH UNDER DASH-P.A. VOLUME	AMP MNL	3	561667	561550
C221	LH UNDER DASH-AMPLIFIER FEED	AMP MNL	3	561550	561667
C222	LH UNDER DASH-P.A. RADIO	AMP MNL	9	561670	561669
C223	LH UNDER DASH-P.A. RADIO	AMP MNL	9	561670	561669
C224	LH UNDER DASH-PA & RADIO FEED	AMP MNL	6	561552	561515
C225	LH UNDER DASH-PA MICRO OUTLET	AMP MNL	3	561667	561550
C226	LH UNDER DASH-PA MICRO OUTLET	AMP MNL	3	561667	561550
C227	RH CONSOLE-SPEAKER CONTROL SW	SWF	8	------	561107
C229	LH UNDER DASH-PA DRV SPEAKERS	AMP MNL	4	561551	561668
C230	ENG.CPT.-FUEL PRIME PUMP SW.	PED WP	2	561566	561690
C231	ENG.CPT.-FUEL PRIME PUMP	PED WP	2	561566	561690
C232	LH SUBFRAME-INVERTER	AMP MNL	4	561551	561668
C233	MICRO OUTLET SOCKET	MOLEX	4	561477	561476
C234	UNDER INSTRUMENT PANEL-VDO	AMP MNL	4	560851	560852
C235	UNDER INSTRUMENT PANEL-VDO	AMP MNL	4	560851	560852
C236	FR SERVICE CPT CENTER-ABS	AMP CPC	14	561585	561583
C237	FR AXLE CPT-ABS RH SENSOR	WABCO	2	641132	------
C238	FR AXLE CPT-ABS RH VALVE	WABCO	3	------	641098
C239	FR AXLE CPT-ABS LH VALVE	WABCO	3	------	641098
C240	FR AXLE CPT-ABS LH SENSOR	WABCO	2	641132	------
C241	DRIVE AXLE CPT-ABS	PED WP	6	561606	561607
C242	DRIVE AXLE CPT-ABS LH SENSOR	DEUTSCH	2	562486	562485
C243	DRIVE AXLE CPT-ABS LH VALVE	WABCO	3	------	641098
C244	DRIVE AXLE CPT-ABS RH VALVE	WABCO	3	------	641098
C245	DRIVE AXLE CPT-ABS RH SENSOR	DEUTSCH	2	562486	562485
C246	DRIVE AXLE CPT-ABS SPARE	PED WP	4	561610	561611
C247	FR SERVICE CPT-ABS MODULE	WABCO	35	------	561094
C248	DRIVE AXLE CPT-ABS	PED WP	6	561606	561607
C249	FR SERVICE CPT-ABS/DDEC	PED WP	2	561566	561690
C250	RH SW PANEL-B/UP CANCEL	SWF	8	------	561107

CONNECTORS CODE (C) P∠N/O G : 2

NO.	LOCATION	TYPE	(NB) CAVITY	*PIN HOUSING	*SOCKET HOUSING
C251	RH SW PANEL-SEAT HTR	SWF	8	------	561107
C252	LH SW PANEL-SWITCH LT	SWF	2	------	561837
C254	FR SERVICE JCT BOX-ABS	AMP CPC	16	561693	561695
C255	RH CONSOLE-RADIO	AMP MNL	9	561670	561669
C257	ENGINE COMPT-WATER HEATER	AMP FF	6	------	561186
C258	DRIVER GUARD WATER HTR TIMER	AMP FF	8	561188	562363
C259	ENGINE COMPT-WATER HEATER	TC	2	561597	------
C260	ENGINE COMPT-WATER HEATER	TC	1	561073	------
C261	ENGINE COMPT-WATER HEATER	TC	2	561597	------
C267	LUGGAGE COMPT. LTS - 1	AMP MNL	2	561248	561247
C268	LUGGAGE COMPT. LTS - 2	AMP MNL	2	561248	561247
C269	LUGGAGE COMPT. LTS - 3 RH	AMP MNL	2	561248	561247
C270	LUGGAGE COMPT. LTS - 3 LH	AMP MNL	2	561248	561247
C271	LUGGAGE COMPT. LTS - 4	AMP MNL	2	561248	561247
C272	FR SERVICE CPT LTS	AMP MNL	2	561248	561247
C274	FR JCT PANEL-DIODES	AMP MNL	15	561987	561986
C276	FR JCT PANEL-ALARM BUZZER	BOSCH	5	------	561183
C290	LUGGAGE CPT-DOOR LOCK	AMP MNL	4	560851	560852
C291	LUGGAGE CPT-DOOR LOCK	AMP MNL	4	560851	560852
C292	LUGGAGE CPT-DOOR LOCK	AMP MNL	4	560851	560852
C293	WIPER MOTOR	AMP FF	6	------	561186
C294	UNDER DASH-WIPER SYST. FEED	AMP MNL	6	561552	561515
C295	UNDER DASH-WIPER PULSE GEN.	AMP FF	6	------	561186
C296	FR SERVICE CPT-HEAD LTS	ITT SS	3	561111	561080
C298	FR LH HAT RACK-AMPLI	MOLEX	6	------	562464
C299	FR LH HAT RACK-AMPLI	MOLEX	10	------	562465
C302	UNDER DASH-FLASHER MODULE	AMP MNL	2	560900	560898
C309	ENGINE DDEC III-ECM POWER	PED WP	5	------	562345
C312	ENGINE DDEC III-ECM SIGNAL	PED WP	3	561781	561782
C313	ENGINE DDEC III-OUTPUT	PED WP	4	562398	------
C326	ENGINE DDEC III- MANUAL TR.	PED WP	4	561610	561611
C364	FR ROOF-DESTINATION SIGN	AMP MNL	3	561667	561550
C365	FR ROOF-DESTINATION SIGN	AMP MNL	2	560900	560898
C368	FR ROOF-DEST. SIGN BALLAST	AMP MNL	3	561667	561550
C369	FR ROOF-DEST. SIGN OPER. SW.	TORRIX	5	------	562110
C370	FR ROOF-DEST. SIGN FLUOR.	AMP MNL	2	560900	560898
C371	FR ROOF-DEST. SIGN FLUOR.	AMP MNL	2	560900	560898
C372	FR ROOF-DEST. SIGN SPEED SW.	MOLEX	4	561477	561476
C382	ENGINE GENERATOR 12 VAC RLY	PED WP	1	561605	561577
C383	LH UNDER DASH-MICRO W/O WIRE	AMP MNL	2	561248	561247
C384	LH UNDER DASH-MICRO W/O WIRE	AMP MNL	3	561550	561667
C385	EVAPORATOR CPT-WATER PUMP	PED WP	2	561566	561590
C386	EVAPORATOR CPT-BYPASS VALVE	PED WP	2	561566	561590
C387	CONDENSER CPT-FAN PRES. SW.	PED WP	2	561566	561590
C394	LH OVER CONSOLE - B/U MONITOR	AMP MNL	4	560851	560852
C395	LH OVER CONSOLE - B/U MONITOR	AMP	5	------	------
C400	ENGINE CPT.BLOCK HEATER	PED WP	3	561781	561782
C426	ENGINE 560 RAD. FAN CLUTCH	PED WP	3	561781	561782
C430	DRIVER GUARD WATER HTR TIMER	AMP FF	8	561188	562363
C500	FR JCT PANEL-PRODRIVER	MOLEX	6	562070	562069
C501	RH CONSOLE-PRODRIVER	PED MP	7	562433	------
C502	DRIVER GUARD PRE-HTR SW.	SWF	8	------	561107
C503	DRIVER GUARD PRE-HTR SW.	SWF	2	------	561837
C504	DRIVER GUARD WEBASTO TIMER	AMP FF	8	561188	562363
C505	DRIVER GUARD ESPAR TIMER	AMP FF	3	------	562034

PREVOST CAR inc. | WIRING DIAGRAM | NO: D060871 | P. G 2/2 PRIOR | REVISION 000

CONNECTORS CODE (C) Page G :1

No.	LOCATION	(NB) TYPE	*PIN CAVITY	*SOCKET HOUSING	HOUSING
C3	UNDER DASH-LH	AMP CPC	37	561645	561646
C7	FR SERVICE CPT.-CLUTCH SW	ITT SS	3	561111	561080
C8	FR JCT PANEL VCR FEED	AMP MNL	2	561248	561247
C11	LH CONSOLE SW-MIRROR	AMP MNL	3	561667	561550
C12	LH CONSOLE SW-MIRROR HTR	AMP MNL	2	561248	561247
C13	LH CONSOLE SW-MIRROR	AMP MNL	6	561552	561515
C14	UNDER DASH LH-MIRROR	AMP MNL	9	561670	561669
C15	UNDER DASH RH-MIRROR	AMP MNL	9	561670	561669
C18	UNDER DASH-FIRE ALARM	AMP MNL	2	560900	560898
C19	UNDER DASH-A/C & HEAT SYST.	TC	10	561072	561110
C20	RR JCT BOX DIODES	AMP MNL	9	561670	561669
C21	LUGGAGE COMPT.-LOCK DOOR MOT.	PED	2	------	562076
C22	ENGINE COMPT.-CYCLOP LT	PED WP	2	561566	561690
C26	UNDER INSTRUMENT.-PANEL RHEO.	TC	2	561030	560997
C29	FR SERVICE COMPT.-VIM FEED	PED WP	3	561781	561782
C32	RH CONSOLE-DRV TEMP SENSOR	BURNDY	3	------	561104
C33	FRSERVICE COMPT. DDEC VSS	PED WP	2	561566	561690
C34	RH CONSOLE-DRV TEMP CTRL	BURNDY	6	------	561103
C35	RECIRULATED AIR GRIL.-SENSER	BURNDY	3	------	561104
C36	LH CONSOLE SW-CRUISE ON/OFF	SWF	8	------	561107
C37	LH CONSOLE SW-CRUISE SET	SWF	8	------	561107
C38	LH CONSOLE SW-CRUISE RESUME	SWF	8	------	561107
C41	UNDER DASH-FLASHER UNIT	TC	2	------	561940
C49	LAVATORY NIGHT LTS	AMP MNL	2	560900	560898
C50	RH CONSOLE-PAS. TEMP CTRL	BURNDY	6	------	561103
C51	RH CONSOLE SW-A/C & HEAT	SWF	8	------	561107
C52	ENGINE COMPT.-COMPRESSOR 05G	PED WP	2	561566	561690
C53	ENGINE COMPT.-COMPRESSOR 05G	PED WP	2	561566	561690
C54	ENGINE COMPT.-COMPRESSOR 05G	TC	1	560098	560697
C61	ENGINE COMPT.-FUEL FILTER	PED WP	2	561566	561690
C67	LH UNDER DASH-AMPLIF. RH SPK	BLAUPUNKT	2	561988	------
C68	LH UNDER DASH-AMPLIF. RH SPK	BLAUPUNKT	2	561988	------
C73	LH SW PANEL-MULTI FUNC. LEV.	AMP FF	8	561188	------
C74	LH SW PANEL-MULTI FUNC. LEV.	AMP FF	6	------	561108
C78	LUGGAGE COMPT.-DOOR LOCK 4 LH	AMP MNL	4	560851	560852
C79	LUGGAGE COMPT.-DOOR LOCK 4 RH	AMP MNL	4	560851	560852
C80	FR JCT PANEL-LUG. DOOR LOCK	AMP MNL	6	561552	561515
C81	LUGGAGE COMPT.-DOOR LOCK 1 LH	AMP MNL	4	560851	560852
C82	LUGGAGE COMPT.-DOOR LOCK 1 RH	AMP MNL	4	560851	560852
C83	UNDER DASH-FLASHER MODULE	TC	10	561072	561110
C84	UNDER DASH-A/C SYSTEM	TC	3	561091	561071
C85	LUGGAGE COMPT.-DOOR LOCK 3 RH	AMP MNL	4	560851	560852
C86	LUGGAGE COMPT.-DOOR LOCK 3 LH	AMP MNL	4	560851	560852
C88	RR END ROOF-CLEARANCE LTS	AMP MNL	2	560900	560898
C90	RR ROOF AUX. A/C THERMOST.	BURNDY	6	------	561103
C91	RR ROOF AUX. A/C TMP SENSOR	BURNDY	6	------	561104
C92	RR ROOF AUX. A/C FAN RH	TC	2	561030	560997
C93	RR ROOF AUX. A/C FAN LH	TC	2	561030	560997
C94	RR ROOF AUX. A/C FAN RES LH	AMP MNL	2	560900	560898
C95	RR ROOF AUX. A/C FAN RES RH	AMP MNL	2	560900	560898
C96	RR ROOF AUX. A/C LIQ SOL VAL	TC	2	561030	560997
C97	RR ROOF AUX. A/C SHUT SOL VAL	AMPHENOL	2	------	560412
C105	UNDER DASH RH-DRV LIQ SOL VL	TC	2	561030	560997
C106	UNDER DASH RH-DRV HTR VALVE	TC	2	561030	560997
C107	UNDER DASH RH-DRV HTR RH FAN	TC	2	561030	560997
C108	UNDER DASH RH-DRV HTR LH FAN	TC	2	561030	560997
C111	LH CONSOLE SW-DRIVER'LTS	SWF	8	------	561107

CONNECTORS CODE (C) Page G :1

No.	LOCATION	(NB) TYPE	*PIN CAVITY	*SOCKET HOUSING	HOUSING
C112	LH CONSOLE SW-GENERAL LTS	SWF	8	------	561107
C114	ENGINE DDEC-SPEED SIGNAL	PED WP	2	561566	561590
C115	RR JCT BOX-ENGINE ACCES.	DEUTSCH	40	562281	562284
C116	DRIVE AXLE COMPT.-AIR DRYER	PED MP	2	------	562251
C119	ENGINE COMPT.-LH LOWER LAMP	PED WP	6	561606	561607
C120	ENGINE COMPT.-LH LOWER LAMP	PED WP	6	561606	561607
C123	HAT RACK-BALLAST RH	AMP MNL	6	561552	561515
C123	HAT RACK-BALLAST RH	AMP MNL	6	561552	561515
C124	HAT RACK-FLUORESCENT	AMP MNL	4	561551	561668
C125	HAT RACK-FLUORESCENT	AMP MNL	4	561551	561668
C126	HAT RACK-READING LTS	AMP MNL	2	560900	560898
C130	LH CONSOLE SW-READING LTS	SWF	8	------	561107
C131	LH CONSOLE SW-LUG.DOOR LOCK	SWF	8	------	561107
C132	LH CONSOLE SW-PAS & HOS CHIME	SWF	8	------	561107
C133	LH CONSOLE SW-JACOB OR RET.	SWF	8	------	561107
C134	LH CONSOLE SW-GALLEY	SWF	8	------	561107
C135	LH SW PANEL-ETHER	SWF	8	------	561107
C136	LH CONSOLE SW-MIRROR HTR	SWF	8	------	561107
C137	RH SW PANEL-HEAD LAMP	SWF	8	------	561107
C138	RH SW PANEL-SPARE	SWF	8	------	561107
C139	RH SW PANEL-FOG LAMP	SWF	8	------	561107
C140	FR JCT PANEL-BAT. HI/LO	AMP MNL	2	560900	560898
C141	ENGINE COMPT.-B/UP ALARM	PED WP	2	561566	561590
C142	FR SERVICE CPT-LH MARKER LTS	ITT SS	3	561111	561080
C143	RR LH HAT RACK-FEEDING	AMP MNL	9	561661	561662
C144	RR RH HAT RACK-FEEDING	AMP MNL	9	561661	561662
C145	RH HAT RACK-BALLAST	AMP MNL	4	560851	560852
C146	FR SERVICE CPT-RH MARKER LTS	ITT SS	3	561111	561080
C147	RR ROOF LH-EMERGENCY EXIT LTS	AMP MNL	2	560900	560898
C148	RR ROOF RH-EMERGENCY EXIT LTS	AMP MNL	2	560900	560898
C149	LH HAT RACK-BALLAST	AMP MNL	4	560851	560852
C150	FR RH HAT RACK-110V FLUOR	AMP MNL	2	561248	561247
C151	FR LH HAT RACK-110V FLUOR	AMP MNL	2	561248	561247
C152	LH HAT RACK-GENERAL LTS	AMP MNL	3	561667	561550
C153	RH HAT RACK-GENERAL LTS	AMP MNL	3	561667	561550
C154	RH SW PANEL-HAZARD	SWF	8	------	561107
C155	LH SW PANEL-FAST IDLE	SWF	8	------	561107
C156	LH SW PANEL-STP ENG. OVER.	SWF	8	------	561107
C158	RR ROOF AUX. A/C FEEDING	AMP MNL	3	561667	561550
C160	FR SERVICE CPT-INTERFACE	AMP CPC	37	561644	561646
C161	ENGINE DDEC III-ECM	PED	30	------	561600
C162	ENGINE DDEC III-ACCESSORIES	PED WP	4	561610	561611
C163	ENGINE CPT-COOLANT PROBE	PED MP	2	------	562350
C164	FR SERVICE JCT BOX	AMP CPC	22	561709	561710
C165	FR SERVICE JCT BOX	AMP CPC	16	561693	561695
C166	UNDER INSTRUMENT PANEL	AMP CPC	16	561639	561640
C167	FR SERVICE CPT-EL. FOOT PEDAL	PED WP	3	561781	561782
C168	FR SERVICE CPT-DDR	DEUTSCH	6	562360	------
C169	FR SERVICE CPT-WORLD TR. VIW	AMP CPC	16	561638	561640
C172	ENGINE COMPT-WATER TANK HEAT.	PED WP	2	561566	561690
C173	LAV.POTABLE-WATER TANK HEAT.	AMP MNL	2	560900	560898
C175	FR SERV CPT-KNEELING FEEDING	PED WP	3	561781	561782
C177	GALLEY-REFRIGERATOR	AMP MNL	2	561248	561247
C179	RH HAT RACK-110V MONITOR	MOLEX	4	561477	561476
C181	FR SERV CPT-KNEELING MODULE	AMP MNL	12	561735	561734
C182	FR SERVICE CPT-SPEED SW	AMP HDP	15	------	562012
C184	FR SERV CPT-KNEEL. MOD. CTRL	AMP MNL	3	------	561550
C184	FR AXLE-KNEELING PROXIMITY SW	AMP MNL	3	561667	561550
C185	FR SERV CPT-KNEEL. MOD. EXH.	AMP MNL	3	------	561550

CONNECTORS CODE (C) Page G :2

No.	LOCATION	(NB) TYPE	*PIN CAVITY	*SOCKET HOUSING	HOUSING
C187	FR SERV CPT-KNEEL. MOD. BRK	AMP MNL	3	------	561550
C187	FR SERVICE JCT BOX-RESISTORS	AMP MNL	6	561552	561515
C188	LH CONSOLE SW-KNEELING	SWF	8	------	561107
C190	FR SERVICE CPT.-WORLD TR VIM	PED WP	30	------	561600
C192	GALLEY-FEEDING	AMP CPC	3	561862	561847
C194	GALLEY SW-CONTAINER RH	SWF	8	------	561107
C195	GALLEY SW-CONTAINER LH	SWF	8	------	561107
C199	FR SERV. JCT BOX-SERVICE BRK	AMP MNL	3	561667	561550
C200	LH CONSOLE SW-24V FLUOR	SWF	8	------	561107
C201	UNDER INSTRUMENT PANEL	AMP MNL	2	560900	560898
C202	UNDER INSTRUMENT PANEL	AMP CPC	9	561636	561637
C205	LH UNDER DASH-AMPLIF. LH SPK	BLAUPUNKT	2	561988	------
C206	RH CONSOLE-FR DEFROSTER	TC	2	561030	560997
C207	RH CONSOLE-DRV RHEOSTAT	AMP MNL	6	561552	561515
C208	UNDER DASH-DRV HTR MODULE	AMP MNL	9	561670	561669
C209	UNDER DASH-DRV HTR MODULE	AMP MNL	9	561670	561669
C210	LH UNDER DASH-AMPLIF. LH SPK	BLAUPUNKT	2	561988	------
C211	RH CONSOLE-VCR VOLUME	AMP MNL	4	561551	561668
C212	LH CONSOLE SW-VCR VIDEO	SWF	8	------	561107
C213	FR ROOF-CLEARANCE LT	AMP MNL	2	560900	560898
C214	UNDER DASH PANEL-TACHOGRAPH	V.D.O.	8	------	562041
C215	UNDER DASH PANEL-TACHOGRAPH	V.D.O.	8	------	562043
C216	UNDER DASH PANEL-TACHOGRAPH	AMP MNL	4	560851	560852
C217	FR LH HAT RACK-SPEAKER	AMP MNL	4	561659	561660
C218	FR RH HAT RACK-SPEAKER	AMP MNL	4	561659	561660
C219	DASH RHEOSTAT-P.A. VOLUME	MOLEX	4	561477	561476
C220	LH UNDER DASH-P.A. VOLUME	AMP MNL	3	561667	561550
C221	LH UNDER DASH-AMPLIFIER FEED	AMP MNL	3	561550	561667
C222	LH UNDER DASH-P.A. RADIO	AMP MNL	9	561670	561669
C223	LH UNDER DASH-P.A. RADIO	AMP MNL	9	561670	561669
C224	LH UNDER DASH-PA & RADIO FEED	AMP MNL	6	561552	561515
C225	LH UNDER DASH-PA MICRO OUTLET	AMP MNL	3	561667	561550
C226	LH UNDER DASH-PA MICRO OUTLET	AMP MNL	3	561667	561550
C227	RH CONSOLE-SPEAKER CONTROL SW	SWF	8	------	561107
C229	LH UNDER DASH-PA DRV SPEAKERS	AMP MNL	4	561551	561668
C230	ENG.CPT.-FUEL PRIME PUMP SW.	PED WP	2	561566	561690
C231	ENG.CPT.-FUEL PRIME PUMP	PED WP	2	561566	561690
C232	LAST LUGGAGE-INVERTER	AMP MNL	4	561551	561668
C233	MICRO OUTLET SOCKET	MOLEX	4	561477	561476
C234	UNDER INSTRUMENT PANEL-VDO	AMP MNL	4	560851	560852
C235	UNDER INSTRUMENT PANEL-VDO	AMP MNL	4	560851	560852
C236	FR SERVICE CPT CENTER-ABS	AMP CPC	14	561585	561583
C237	FR AXLE CPT-ABS RH SENSOR	WABCO	2	641132	------
C238	FR AXLE CPT-ABS RH VALVE	WABCO	3	------	641098
C239	FR AXLE CPT-ABS LH VALVE	WABCO	3	------	641098
C240	FR AXLE CPT-ABS LH SENSOR	WABCO	2	641132	------
C241	DRIVE AXLE CPT-ABS	PED WP	6	561606	561607
C242	DRIVE AXLE CPT-ABS LH SENSOR	DEUTSCH	2	562486	562485
C243	DRIVE AXLE CPT-ABS LH VALVE	WABCO	3	------	641098
C244	DRIVE AXLE CPT-ABS RH VALVE	WABCO	3	------	641098
C245	DRIVE AXLE CPT-ABS RH SENSOR	DEUTSCH	2	562486	562485
C246	DRIVE AXLE CPT-ABS SPARE	PED WP	4	561610	561611
C247	FR SERVICE CPT-ABS MODULE	WABCO	35	------	561094
C248	DRIVE AXLE CPT-ABS	PED WP	6	561606	561607
C249	FR SERVICE CPT-ABS/DDEC	PED WP	2	561566	561690
C250	RH SW PANEL-B/UP CANCEL	SWF	8	------	561107

CONNECTORS CODE (C) Page G :2

No.	LOCATION	(NB) TYPE	*PIN CAVITY	*SOCKET HOUSING	HOUSING
C251	RH SW PANEL-SEAT HTR	SWF	8	------	561107
C252	LH SW PANEL-SWITCH LT	SWF	2	------	561837
C254	FR SERVICE JCT BOX-ABS	AMP CPC	16	561693	561695
C255	RH CONSOLE-RADIO	AMP MNL	9	561670	561669
C257	ENGINE COMPT-WATER HEATER	AMP FF	6	------	561186
C258	DRIVER GUARD WATER HTR TIMER	AMP FF	8	561188	562363
C259	ENGINE COMPT-WATER HEATER	TC	2	561597	------
C260	ENGINE COMPT-WATER HEATER	TC	1	561073	------
C261	ENGINE COMPT-WATER HEATER	TC	2	561597	------
C267	LUGGAGE COMPT. LTS - 1	AMP MNL	2	561248	561247
C268	LUGGAGE COMPT. LTS - 2	AMP MNL	2	561248	561247
C269	LUGGAGE COMPT. LTS - 3 RH	AMP MNL	2	561248	561247
C270	LUGGAGE COMPT. LTS - 3 LH	AMP MNL	2	561248	561247
C271	LUGGAGE COMPT. LTS - 4	AMP MNL	2	561248	561247
C272	FR SERVICE CPT LTS	AMP MNL	2	561248	561247
C274	FR JCT PANEL-DIODES	AMP MNL	15	561987	561986
C276	FR JCT PANEL-ALARM BUZZER	BOSCH	5	------	561183
C290	LUGGAGE CPT-DOOR LOCK	AMP MNL	4	560851	560852
C291	LUGGAGE CPT-DOOR LOCK	AMP MNL	4	560851	560852
C292	LUGGAGE CPT-DOOR LOCK	AMP MNL	4	560851	560852
C293	WIPER MOTOR	AMP FF	6	------	561186
C294	UNDER DASH-WIPER SYST. FEED	AMP MNL	6	561552	561515
C295	UNDER DASH-WIPER PULSE GEN.	AMP FF	6	------	561186
C296	FR SERVICE CPT-HEAD LTS	ITT SS	3	561111	561080
C298	FR LH HAT RACK-AMPLI	MOLEX	6	------	562464
C299	FR LH HAT RACK-AMPLI	MOLEX	10	------	562465
C302	UNDER DASH-FLASHER MODULE	AMP MNL	2	560900	560898
C309	ENGINE DDEC III-ECM POWER	PED WP	5	------	562345
C312	ENGINE DDEC III-ECM SIGNAL	PED WP	3	561781	561782
C313	ENGINE DDEC III-OUTPUT	PED WP	4	562398	------
C314	FR SERVICE CPT-PRESS.SW KNEEL	PED WP	2	561566	561690
C315	FR SERVICE CPT-KNEEL. ALARM	PED WP	2	561566	561690
C316	FR SERVICE CPT-KNEEL. ALARM	AMP MNL	2	560900	560898
C326	ENGINE DDEC III- MANUAL TR. PED	WP	4	561610	561611
C364	FR ROOF-DESTINATION SIGN	AMP MNL	3	561667	561550
C365	FR ROOF-DESTINATION SIGN	AMP MNL	2	560900	560898
C368	FR ROOF-DEST. SIGN BALLAST	AMP MNL	3	561667	561550
C369	FR ROOF-DEST. SIGN OPER. SW.	TORRIX	5	------	562110
C370	FR ROOF-DEST. SIGN FLUOR.	AMP MNL	2	560900	560898
C371	FR ROOF-DEST. SIGN FLUOR.	AMP MNL	2	560900	560898
C372	FR ROOF-DEST. SIGN SPEED SW.	MOLEX	4	561477	561476
C382	ENGINE GENERATOR 12 VAC RLY	PED WP	1	561605	561577
C383	LH UNDER DASH-MICRO W/O WIRE	AMP MNL	2	561248	561247
C384	LH UNDER DASH-MICRO W/O WIRE	AMP MNL	3	561550	561667
C385	EVAPORATOR CPT-WATER PUMP	PED WP	2	561566	561590
C386	EVAPORATOR CPT-BYPASS VALVE	PED WP	2	561566	561590
C387	CONDENSER CPT-FAN PRES. SW.	PED WP	2	561566	561590
C394	LH OVER CONSOLE - B/U MONITOR	AMP MNL	4	560851	560852
C395	LH OVER CONSOLE - B/U MONITOR	AMP	5	------	------
C400	ENGINE CPT.BLOCK HEATER	PED WP	3	561781	561782
C426	ENGINE S60 RAD. FAN CLUTCH	PED WP	3	561781	561782
C430	DRIVER GUARD WATER HTR TIMER	AMP FF	8	561188	562363
C500	FR JCT PANEL-PRODRIVER	MOLEX	6	562070	562069
C501	RH CONSOLE-PRODRIVER	PED MP	7	562433	------
C502	DRIVER GUARD PRE-HTR SW.	SWF	8	------	561107
C503	DRIVER GUARD PRE-HTR SW.	SWF	2	------	561837
C504	DRIVER GUARD WEBASTO TIMER	AMP FF	8	561188	562363
C505	DRIVER GUARD ESPAR TIMER	AMP FF	3	------	562034
C508	RR JCT BOX-MOD.FAN CLUTCH	AMP MNL	6	561552	561515

CONNECTORS CODE (C)

Page G :1

No.	LOCATION	(NB) TYPE	*PIN CAVITY	*SOCKET HOUSING	HOUSING
C3	UNDER DASH-LH	AMP CPC	37	561645	561646
C7	FR SERVICE COMPT.-CLUTCH SW	ITT SS	3	561111	561080
C8	FR JCT PANEL VCR FEED	AMP MNL	2	561248	561247
C11	LH CONSOLE SW-MIRROR	AMP MNL	3	561667	561550
C12	LH CONSOLE SW-MIRROR HTR	AMP MNL	2	561248	561247
C13	LH CONSOLE SW-MIRROR	AMP MNL	6	561552	561515
C14	UNDER DASH LH-MIRROR	AMP MNL	9	561670	561669
C15	UNDER DASH RH-MIRROR	AMP MNL	9	561670	561669
C18	UNDER DASH-FIRE ALARM	AMP MNL	2	560900	560898
C19	UNDER DASH-A/C & HEAT SYST.	TC	10	561072	561110
C20	RR JCT BOX DIODES	AMP MNL	9	561670	561669
C21	LUGGAGE COMPT.-LOCK DOOR MOT.	PED	2	-------	562076
C22	ENGINE COMPT.-CYLOP. LT	PED WP	2	561566	561690
C26	UNDER INSTRUMENT.-PANEL RHEO.	TC	2	561030	560997
C29	FR SERVICE COMPT.-VIM FEED	PED WP	3	561781	561782
C32	RH CONSOLE-DRV TEMP SENSOR	BURNDY	3	-------	561104
C33	FRSERVICE COMPT.DDEC VSS	PED WP	2	561566	561690
C34	RH CONSOLE-DRV TEMP CTRL	BURNDY	6	-------	561103
C35	RECIRULATED AIR GRIL.-SENSER	BURNDY	3	-------	561104
C36	LH CONSOLE SW-CRUISE ON/OFF	SWF	8	-------	561107
C37	LH CONSOLE SW-CRUISE SET	SWF	8	-------	561107
C38	LH CONSOLE SW-CRUISE RESUME	SWF	8	-------	561107
C41	UNDER DASH-FLASHER UNIT	TC	2	-------	561940
C49	LAVATORY NIGHT LTS	AMP MNL	2	560900	560898
C50	RH CONSOLE-PAS. TEMP CTRL	BURNDY	6	-------	561103
C51	RH CONSOLE SW-A/C & HEAT	SWF	8	-------	561107
C52	ENGINE COMPT.-COMPRESSOR OSC	PED WP	2	561566	561690
C53	ENGINE COMPT.-COMPRESSOR OSC	PED WP	2	561566	561690
C54	ENGINE COMPT.-COMPRESSOR OSC	TC	1	560998	560897
C61	ENGINE COMPT.-FUEL FILTER	PED WP	2	561566	561690
C67	LH UNDER DASH-AMPLIF.,RH SPK	BLAUPUNKT	2	561988	-------
C68	LH UNDER DASH-AMPLIF.,RH SPK	BLAUPUNKT	2	561988	-------
C73	LH SW PANEL-MULTIFUNC.LEV.	AMP FF	8	561188	-------
C74	LH SW PANEL-MULTIFUNC.LEV.	AMP FF	6	-------	561108
C78	LUGGAGE COMPT.-DOOR LOCK 4 LH	AMP MNL	4	560851	560852
C79	LUGGAGE COMPT.-DOOR LOCK 4 RH	AMP MNL	4	560851	560852
C80	FR JCT PANEL-LUG.DOOR LOCK	AMP MNL	6	561552	561515
C81	LUGGAGE COMPT.-DOOR LOCK 1 LH	AMP MNL	4	560851	560852
C82	LUGGAGE COMPT.-DOOR LOCK 1 RH	AMP MNL	4	560851	560852
C83	UNDER DASH-FLASHER MODULE	TC	10	561072	561110
C84	UNDER DASH-A/C SYSTEM	TC	3	561091	561071
C85	LUGGAGE COMPT.-DOOR LOCK 3 RH	AMP MNL	4	560851	560852
C86	LUGGAGE COMPT.-DOOR LOCK 3 LH	AMP MNL	4	560851	560852
C88	RR END ROOF-CLEARANCE LTS	AMP MNL	2	560900	560898
C90	RR ROOF AUX.A/C THERMOST.	BURNDY	6	-------	561103
C91	RR ROOF AUX. A/C TMP SENSOR	BURNDY	6	-------	561104
C92	RR ROOF AUX. A/C FAN RH	TC	2	561030	560997
C93	RR ROOF AUX. A/C FAN LH	TC	2	561030	560997
C94	RR ROOF AUX. A/C FAN RES LH	AMP MNL	2	560900	560898
C95	RR ROOF AUX. A/C FAN RES RH	AMP MNL	2	560900	560898
C96	RR ROOF AUX. A/C LIQ SOL VAL	TC	2	561030	560997
C97	RR ROOF AUX. A/C SHUT SOL VAL	AMPHENOL	2	-------	560412
C105	UNDER DASH RH-DRV LIQ SOL VL	TC	2	561030	560997
C106	UNDER DASH RH-DRV WTR VALVE	TC	2	561030	560997
C107	UNDER DASH RH-DRV HTR RH FAN	TC	2	561030	560997
C108	UNDER DASH RH-DRV HTR LH FAN	TC	2	561030	560997
C111	LH CONSOLE SW-DRIVER'LTS	SWF	8	-------	561107

CONNECTORS CODE (C)

Page G :1

No.	LOCATION	(NB) TYPE	*PIN CAVITY	*SOCKET HOUSING	HOUSING
C112	LH CONSOLE SW-GENERAL LTS	SWF	8	-------	561107
C114	ENGINE DDEC-SPEED SIGNAL	PED WP	2	561566	561590
C115	RR JCT BOX-ENGINE ACCES.	DEUTSCH	40	562281	562284
C116	DRIVE AXLE COMPT.-AIR DRYER	PED WP	2	-------	562251
C119	ENGINE COMPT.-LH LOWER LAMP	PED WP	6	561606	561607
C120	ENGINE COMPT.-LH LOWER LAMP	PED WP	6	561606	561607
C123	HAT RACK-BALLAST RH	AMP MNL	6	561552	561515
C123	HAT RACK-BALLAST RH	AMP MNL	6	561552	561515
C124	HAT RACK-FLUORESCENT	AMP MNL	4	561551	561668
C125	HAT RACK-FLUORESCENT	AMP MNL	4	561551	561668
C126	HAT RACK-READING LTS	AMP MNL	2	560900	560898
C130	LH CONSOLE SW-READING LTS	SWF	8	-------	561107
C131	LH CONSOLE SW-LUG.DOOR LOCK	SWF	8	-------	561107
C132	LH CONSOLE SW-PAS & HOS.CHIME	SWF	8	-------	561107
C133	LH CONSOLE SW-JACOB OR RET.	SWF	8	-------	561107
C134	LH CONSOLE SW-CALLEY	SWF	8	-------	561107
C135	LH SW PANEL-ETHER	SWF	8	-------	561107
C136	LH CONSOLE SW-MIRROR HTR	SWF	8	-------	561107
C137	RH SW PANEL-HEAD LAMP	SWF	8	-------	561107
C138	RH SW PANEL-SPARE	SWF	8	-------	561107
C139	RH SW PANEL-FOG LAMP	SWF	8	-------	561107
C140	FR JCT PANEL-BAT.HI/LO	AMP MNL	2	560900	560898
C141	ENGINE COMPT.-B/UP ALARM	PED WP	2	561566	561590
C142	FR SERVICE CPT-LH MARKER LTS	ITT SS	3	561111	561080
C143	RR LH HAT RACK-FEEDING	AMP MNL	9	561661	561662
C144	RR RH HAT RACK-FEEDING	AMP MNL	9	561661	561662
C145	RH HAT RACK-BALLAST	AMP MNL	4	560851	560852
C146	FR SERVICE CPT-RH MARKER LTS	ITT SS	3	561111	561080
C147	RR ROOF LH-EMERGENCY EXIT LTS	AMP MNL	2	560900	560898
C148	RR ROOF RH-EMERGENCY EXIT LTS	AMP MNL	2	560900	560898
C149	LH HAT RACK-BALLAST	AMP MNL	4	560851	560852
C150	FR RH HAT RACK-110V FLUOR	AMP MNL	2	561248	561247
C151	FR LH HAT RACK-110V FLUOR	AMP MNL	2	561248	561247
C152	LH HAT RACK-GENERAL LTS	AMP MNL	3	561667	561550
C153	RH HAT RACK-GENERAL LTS	AMP MNL	3	561667	561550
C154	RH SW PANEL-HAZARD	SWF	8	-------	561107
C155	LH SW PANEL-FAST IDLE	SWF	8	-------	561107
C156	LH SW PANEL-STP ENG.OVER.	SWF	8	-------	561107
C158	RR ROOF AUX. A/C FEEDING	AMP MNL	3	561667	561550
C160	FR SERVICE CPT-INTERFACE	AMP CPC	37	561644	561646
C161	ENGINE DDEC III-ECM	PED	30	-------	561600
C162	ENGINE DDEC III-ACCESSORIES	PED WP	4	561610	561611
C163	ENGINE CPT-COOLANT PROBE	PED MP	2	-------	562350
C164	FR SERVICE JCT BOX	AMP CPC	22	561709	561710
C165	FR SERVICE JCT BOX	AMP CPC	16	561693	561695
C166	UNDER INSTRUMENT PANEL	AMP CPC	16	561639	561640
C167	FR SERVICE CPT-EL. FOOT PEDAL	PED WP	3	561781	561782
C168	FR SERVICE CPT-DDR	DEUTSCH	6	562360	-------
C169	FR SERVICE CPT-WORLD TR.VIM	AMP CPC	16	561638	561640
C172	ENGINE COMPT-WATER TANK HEAT.	PED WP	2	561566	561690
C173	LAV.POTABLE-WATER TANK HEAT.	AMP MNL	2	560900	560898
C175	FR SERV CPT-KNEELING FEEDING	PED WP	3	561781	561782
C177	GALLEY-REFRIGERATOR	AMP MNL	2	561248	561247
C179	RH HAT RACK-110V MONITOR	MOLEX	4	561477	561476
C181	FR SERV CPT-KNEELING MODULE	AMP MNL	12	561735	561734
C182	FR SERVICE CPT-SPEED SW	AMP HOP	15	-------	562012
C184	FR SERV CPT-KNEEL MOD.CTRL	AMP MNL	3	-------	561550
C184	FR AXLE-KNEELING PROXIMITY SW	AMP MNL	3	561667	561550
C185	FR SERV CPT-KNEEL MOD.EXH.	AMP MNL	3	-------	561550

CONNECTORS CODE (C)

Page G :2

No.	LOCATION	(NB) TYPE	*PIN CAVITY	*SOCKET HOUSING	HOUSING
C187	FR SERV CPT-KNEEL.MOD.BRK	AMP MNL	3	-------	561550
C187	FR SERVICE JCT BOX-REGSITORS	AMP MNL	6	561552	561515
C188	LH CONSOLE SW-KNEELING	SWF	8	-------	561107
C190	FR SERVICE CPT.-WORLD TR VIM	PED WP	30	-------	561600
C192	GALLEY-FEEDING	AMP CPC	3	561862	561847
C194	GALLEY SW-CONTAINER RH	SWF	8	-------	561107
C195	GALLEY SW-CONTAINER LH	SWF	8	-------	561107
C199	FR SERV. JCT BOX-SERVICE BRK	AMP MNL	3	561667	561550
C200	LH CONSOLE SW-24V FLUOR	SWF	8	-------	561107
C201	UNDER INSTRUMENT PANEL	AMP MNL	2	560900	560898
C202	UNDER INSTRUMENT PANEL	AMP CPC	5	561636	561637
C205	LH UNDER DASH-AMPLIF.,LH SPK	BLAUPUNKT	2	561988	-------
C206	RH CONSOLE-FR DEFROSTER	TC	2	561030	560997
C207	RH CONSOLE-DRV RHEOSTAT	AMP MNL	6	561552	561515
C208	UNDER DASH-DRV HTR MODULE	AMP MNL	9	561670	561669
C209	UNDER DASH-DRV HTR MODULE	AMP MNL	9	561670	561669
C210	LH UNDER DASH-AMPLIF.,LH SPK	BLAUPUNKT	2	561988	-------
C211	RH CONSOLE-VCR VOLUME	AMP MNL	4	561551	561668
C212	LH CONSOLE SW-VCR VIDEO	SWF	8	-------	561107
C213	FR ROOF-CLEARANCE LT	AMP MNL	2	560900	560898
C214	UNDER DASH PANEL-TACHOGRAPH	V.D.O.	8	-------	562041
C215	UNDER DASH PANEL-TACHOGRAPH	V.D.O.	8	-------	562043
C216	UNDER DASH PANEL-TACHOGRAPH	AMP MNL	4	560851	560852
C217	FR LH HAT RACK-SPEAKER	AMP MNL	4	561659	561660
C218	FR RH HAT RACK-SPEAKER	AMP MNL	4	561659	561660
C219	DASH RHEOSTAT-P.A. VOLUME	MOLEX	4	561477	561476
C220	LH UNDER DASH-P.A. VOLUME	AMP MNL	3	561667	561550
C221	LH UNDER DASH-AMPLIFIER FEED	AMP MNL	3	561550	561667
C222	LH UNDER DASH-P.A. RADIO	AMP MNL	9	561670	561669
C223	LH UNDER DASH-P.A. RADIO	AMP MNL	9	561670	561669
C224	LH UNDER DASH-PA & RADIO FEED	AMP MNL	6	561552	561515
C225	LH UNDER DASH-PA MICRO OUTLET	AMP MNL	3	561667	561550
C226	LH UNDER DASH-PA MICRO OUTLET	AMP MNL	3	561667	561550
C227	RH CONSOLE-SPEAKER CONTROL SW	SWF	8	-------	561107
C229	LH UNDER DASH-PA.DRV SPEAKERS	AMP MNL	4	561551	561668
C230	ENG.CPT.-FUEL PRIME PUMP SW.	PED WP	2	561566	561690
C231	ENG.CPT.-FUEL PRIME PUMP	PED WP	2	561566	561690
C232	LAST LUGGAGE-INVERTER	AMP MNL	4	561551	561668
C233	MICRO OUTLET SOCKET	MOLEX	4	561477	561476
C234	UNDER INSTRUMENT PANEL-VDO	AMP MNL	4	560851	560852
C235	UNDER INSTRUMENT PANEL-VDO	AMP MNL	4	560851	560852
C236	FR SERVICE CPT CENTER-ABS	AMP CPC	14	561845	561583
C237	FR AXLE CPT-ABS RH SENSOR	WABCO	2	641132	-------
C238	FR AXLE CPT-ABS RH VALVE	WABCO	3	-------	641098
C239	FR AXLE CPT-ABS LH VALVE	WABCO	3	-------	641098
C240	FR AXLE CPT-ABS LH SENSOR	WABCO	2	641132	-------
C241	DRIVE AXLE CPT-ABS	PED WP	6	561606	561607
C242	DRIVE AXLE CPT-ABS LH SENSOR	DEUTSCH	2	562486	562485
C243	DRIVE AXLE CPT-ABS LH VALVE	WABCO	3	561781	561782
C244	DRIVE AXLE CPT-ABS RH VALVE	WABCO	3	-------	641098
C245	DRIVE AXLE CPT-ABS RH SENSOR	DEUTSCH	2	562486	562485
C246	DRIVE AXLE CPT-ABS SPARE	PED WP	4	561610	561611
C247	FR SERVICE CPT-ABS MODULE	WABCO	35	-------	561094
C248	DRIVE AXLE CPT-ABS	PED WP	6	561606	561607
C249	FR SERVICE CPT-ABS/ODEC	PED WP	2	561566	561690
C250	RH SW PANEL-B/UP CANCEL	SWF	8	-------	561107

CONNECTORS CODE (C)

Page G :2

No.	LOCATION	(NB) TYPE	*PIN CAVITY	*SOCKET HOUSING	HOUSING
C251	RH SW PANEL-SEAT HTR	SWF	8	-------	561107
C252	LH SW PANEL-SWITCH LT	SWF	2	-------	561837
C254	FR SERVICE JCT BOX-ABS	AMP CPC	16	561693	561695
C255	RH CONSOLE-RADIO	AMP MNL	9	561670	561669
C257	ENGINE COMPT-WATER HEATER	AMP FF	6	-------	561186
C258	DRIVER GUARD WATER HTR TIMER	AMP FF	8	561188	562363
C259	ENGINE COMPT-WATER HEATER	TC	2	561597	-------
C260	ENGINE COMPT-WATER HEATER	TC	1	561073	-------
C261	ENGINE COMPT-WATER HEATER	TC	2	561597	-------
C267	LUGGAGE COMPT. LTS - 1	AMP MNL	2	561248	561247
C268	LUGGAGE COMPT. LTS - 2	AMP MNL	2	561248	561247
C269	LUGGAGE COMPT. LTS - 3 RH	AMP MNL	2	561248	561247
C270	LUGGAGE COMPT. LTS - 3 LH	AMP MNL	2	561248	561247
C271	LUGGAGE COMPT. LTS - 4	AMP MNL	2	561248	561247
C272	FR SERVICE CPT LTS	AMP MNL	2	561248	561247
C274	FR JCT PANEL-DODCS	AMP MNL	15	561987	561986
C276	FR JCT PANEL-ALARM BUZZER	BOSCH	5	-------	561183
C290	LUGGAGE CPT-DOOR LOCK	AMP MNL	4	560851	560852
C291	LUGGAGE CPT-DOOR LOCK	AMP MNL	4	560851	560852
C292	LUGGAGE CPT-DOOR LOCK	AMP MNL	4	560851	560852
C293	WIPER MOTOR	AMP FF	6	-------	561186
C294	UNDER DASH-WIPER SYST.FEED	AMP MNL	6	561552	561515
C295	UNDER DASH-WIPER PULSE GEN.	AMP FF	6	-------	561186
C296	FR SERVICE CPT-HEAD LTS	ITT SS	3	561111	561080
C298	FR LH HAT RACK-AMPLI	MOLEX	6	-------	562464
C299	FR LH HAT RACK-AMPLI	MOLEX	10	-------	562465
C302	UNDER DASH-FLASHER MODULE	AMP MNL	2	560900	560898
C309	ENGINE DDEC III-ECM POWER	PED WP	5	-------	562345
C312	ENGINE DDEC III-ECM SIGNAL	PED WP	3	561781	561782
C313	ENGINE DDEC III-OUTPUT	PED WP	4	562398	-------
C314	FR SERVICE CPT-PRESS.SW. KNEEL	PED WP	2	561566	561690
C315	FR SERVICE CPT-KNEEL.ALARM	PED WP	2	561566	561690
C316	FR SERVICE CPT-KNEEL.ALARM	AMP MNL	2	560900	560898
C326	ENGINE DDEC III-MANUAL TR.	PED WP	4	561610	561611
C364	FR ROOF-DESTINATION SIGN	AMP MNL	3	561667	561550
C365	FR ROOF-DESTINATION SIGN	AMP MNL	2	560900	560898
C368	FR ROOF-DEST.SIGN BALLAST	AMP MNL	3	561667	561550
C369	FR ROOF-DEST.SIGN OPER.SW.	TORRIX	5	-------	562110
C370	FR ROOF-DEST.SIGN FLUOR.	AMP MNL	2	560900	560898
C371	FR ROOF-DEST.SIGN FLUOR.	AMP MNL	2	560900	560898
C372	FR ROOF-DEST. SIGN SPEED SW.	MOLEX	4	561477	561476
C382	ENGINE GENERATOR 12 VAC RLY	PED WP	1	561605	561577
C383	LH UNDER DASH-MICRO W/O WIRE	AMP MNL	2	561248	561247
C384	LH UNDER DASH-MICRO W/O WIRE	AMP MNL	3	561550	561667
C385	EVAPORATOR CPT-WATER PUMP	PED WP	2	561566	561590
C386	EVAPORATOR CPT-BYPASS VALVE	PED WP	2	561566	561590
C387	CONDENSER CPT-FAN PRES.SW.	PED WP	2	561566	561590
C394	LH OVER CONSOLE - B/U MONITOR	AMP MNL	4	560851	560852
C395	LH OVER CONSOLE - B/U MONITOR	AMP MNL	5	-------	-------
C400	ENGINE CPT.BLOCK HEATER	PED WP	3	561781	561782
C426	ENGINE 560 RAD.FAN CLUTCH	PED WP	3	561781	561782
C430	DRIVER GUARD WATER HTR TIMER	AMP FF	8	561188	562363

CONNECTORS CODE (C)

Page G :2

No.	LOCATION	(NB) TYPE	*PIN CAVITY	*SOCKET HOUSING	HOUSING
C456	WORLD TRANSM.-RETARDER ACCUM.PED	WP	2	-------	562427
C457	WORLD TRANSM.-MAIN CONNECTOR	DEUTSCH	31	562572	562536
C458	WORLD TRANSM.-TURBINE SP.SENS	PED MP	2	-------	562426
C459	WORLD TRANSM.-ENGINE SP.SENS	PED MP	2	-------	562426
C460	WORLD TRANSM.-SPEED SENSOR	ITT	2	-------	562541
C461	WORLD TRANSM.-RETARDER TEMP.	PED MP	2	561566	561590
C462	WORLD TRANSM.-RETARD SOL."K"	PED MP	2	-------	562426
C463	WORLD TRANSM.-SENSOR CONN.	DEUTSCH	16	562570	562571
C464	FR SERVICE CPT.-OOL CONN. W.T.	PED MP	12	-------	562574
C465	LH CONSOLE-SHIFTER SELECTOR T & BET		10	-------	562429
C466	FR SERVICE CPT.-RESIS. MOD.	PED WP	3	-------	562428
C467	FR SERVICE CPT.-RESIS. MOD.	PED WP	3	-------	562428
C468	FR SERVICE CPT.-VIM MOD. W.T.	PED MP	18	-------	562573
C470	FR SERVICE CPT.-SILENT 1000	AMP MNL	2	561248	561247
C471	FR SERVICE CPT.-SILENT 1000	AMP MNL	2	561248	561247
C472	FR SERVICE CPT.-SILENT 1000	PED WP	2	561566	561690
C473	FR SERVICE CPT.-SILENT 1000	AMP MNL	3	561667	561550
C500	FR JCT PANEL-PRODRIVER	MOLEX	6	562070	562069
C501	RH CONSOLE-PRODRIVER	PED MP	7	562433	-------
C502	DRIVER GUARD PRE-HTR SW.	SWF	8	-------	561107
C503	DRIVER GUARD PRE-HTR SW.	SWF	2	-------	561837
C504	DRIVER GUARD WEBASTO TIMER	AMP FF	8	561188	562363
C505	DRIVER GUARD ESPAR TIMER	AMP FF	3	-------	562034
C508	RR JCT BOX-MOD.FAN CLUTCH	AMP MNL	6	561552	561515
CA	FR SERVICE CPT-ECU WORLD TR. T & BET		34	-------	562419
CB	FR SERVICE CPT-ECU WORLD TR. T & BET		34	-------	562420

CONNECTORS CODE (C) Page G :1

No.	LOCATION	(NB) TYPE	*PIN CAVITY	*SOCKET HOUSING	HOUSING
C3	UNDER DASH-LH	AMP CPC	37	561645	561646
C7	FR SERVICE COMPT.-CLUTCH SW	ITT SS	3	561111	561080
C8	FR JCT PANEL VCR FEED	AMP MNL	2	561248	561247 PRIOR REV 008
C11	LH CONSOLE SW-MIRROR	AMP MNL	3	561667	561550
C12	LH CONSOLE SW-MIRROR HTR	AMP MNL	2	561248	561247
C13	LH CONSOLE SW-MIRROR	AMP MNL	6	561552	561515
C14	UNDER DASH LH-MIRROR	AMP MNL	9	561670	561669
C15	UNDER DASH RH-MIRROR	AMP MNL	9	561670	561669
C18	UNDER DASH-FIRE ALARM	AMP MNL	2	560900	560898
C19	UNDER DASH-A/C & HEAT SYST.	TC	10	561072	561110
C20	RR JCT BOX DIODES	AMP MNL	9	561670	561669
C21	LUGGAGE COMPT.-LOCK DOOR MOT. PED		2	-------	562076
C22	ENGINE COMPT.-CYLOP LT	PED WP	2	561566	561690
C26	UNDER INSTRUMENT.-PANEL RHEO.	TC	2	561030	560997
C29	FR SERVICE COMPT.-VM FEED	PED WP	3	561781	561782
C32	RH CONSOLE-DRV TEMP SENSOR	BURNDY	3	-------	561104
C33	FRSERVICE COMPT.DDEC VSS	PED WP	2	561566	561690
C34	RH CONSOLE-DRV TEMP CTRL	BURNDY	6	-------	561103
C35	RECIRULATED AIR GRIL.-SENSER	BURNDY	3	-------	561104
C36	LH CONSOLE SW-CRUISE ON/OFF	SWF	8	-------	561107
C37	LH CONSOLE SW-CRUISE SET	SWF	8	-------	561107
C38	LH CONSOLE SW-CRUISE RESUME	SWF	8	-------	561107
C41	UNDER DASH-FLASHER UNIT	TC	2	-------	561940
C49	LAVATORY NIGHT LTS	AMP MNL	2	560900	560898
C50	RH CONSOLE-PAS. TEMP CTRL	BURNDY	6	-------	561103
C51	RH CONSOLE SW-A/C & HEAT	SWF	8	-------	561107
C52	ENGINE COMPT.-COMPRESSOR OSC	PED WP	2	561566	561690
C53	ENGINE COMPT.-COMPRESSOR OSC	PED WP	2	561566	561690
C54	ENGINE COMPT.-COMPRESSOR OSC	TC	1	560998	560897
C61	ENGINE COMPT.-FUEL FILTER	PED WP	2	561566	561690
C67	LH UNDER DASH-AMPLIF.,RH SPK	BLAUPUNKT	2	561988	-------
C68	LH UNDER DASH-AMPLIF.,RH SPK	BLAUPUNKT	2	561988	-------
C73	LH SW PANEL-MULTIFUNC.LEV.	AMP FF	8	561188	-------
C74	LH SW PANEL-MULTIFUNC.LEV.	AMP FF	6	-------	561108
C78	LUGGAGE COMPT.-DOOR LOCK 4 LH	AMP MNL	4	560851	560852
C79	LUGGAGE COMPT.-DOOR LOCK 4 RH	AMP MNL	4	560851	560852
C80	FR JCT PANEL-LUG.DOOR LOCK	AMP MNL	6	561552	561515
C81	LUGGAGE COMPT.-DOOR LOCK 1 LH	AMP MNL	4	560851	560852
C82	LUGGAGE COMPT.-DOOR LOCK 1 RH	AMP MNL	4	560851	560852
C83	UNDER DASH-FLASHER MODULE	TC	10	561072	561110
C84	UNDER DASH-A/C SYSTEM	TC	3	561091	561071
C85	LUGGAGE COMPT.-DOOR LOCK 3 RH	AMP MNL	4	560851	560852
C86	LUGGAGE COMPT.-DOOR LOCK 3 LH	AMP MNL	4	560851	560852
C88	RR END ROOF-CLEARANCE LTS	AMP MNL	2	560900	560898
C90	RR ROOF AUX. A/C THERMOST.	BURNDY	6	-------	561103
C91	RR ROOF AUX. A/C TMP SENSOR	BURNDY	6	-------	561104
C92	RR ROOF AUX. A/C FAN RH	TC	2	561030	560997
C93	RR ROOF AUX. A/C FAN LH	TC	2	561030	560997
C94	RR ROOF AUX. A/C FAN RES LH	AMP MNL	2	560900	560898
C95	RR ROOF AUX. A/C FAN RES RH	AMP MNL	2	560900	560898
C96	RR ROOF AUX. A/C LIQ SOL VAL	TC	2	561030	560997
C97	RR ROOF AUX. A/C SHUT SOL VAL	AMPHENOL	2	-------	560412
C105	UNDER DASH RH-DRV LIQ SOL VL	TC	2	561030	560997
C106	UNDER DASH RH-DRV WTR VALVE	TC	2	561030	560997
C107	UNDER DASH RH-DRV HTR RH FAN	TC	2	561030	560997
C108	UNDER DASH RH-DRV HTR LH FAN	TC	2	561030	560997
C111	LH CONSOLE SW-DRIVER1TS	SWF	8	-------	561107

CONNECTORS CODE (C) Page G :1

No.	LOCATION	(NB) TYPE	*PIN CAVITY	*SOCKET HOUSING	HOUSING
C112	LH CONSOLE SW-GENERAL LTS	SWF	8	-------	561107
C114	ENGINE DDEC-SPEED SIGNAL	PED WP	2	561566	561590
C115	RR JCT BOX-ENGINE ACCES. DEUTSCH	40	562281	562284	
C116	DRIVE AXLE COMPT.-AIR DRYER	PED WP	2	-------	562251
C119	ENGINE COMPT.-LH LOWER LAMP	PED WP	6	561606	561607
C120	ENGINE COMPT.-LH LOWER LAMP	PED WP	6	561606	561607
C123	HAT RACK-BALLAST RH	AMP MNL	6	561552	561515
C123	HAT RACK-BALLAST RH	AMP MNL	6	561552	561515
C124	HAT RACK-FLUORESCENT	AMP MNL	4	561551	561668
C125	HAT RACK-FLUORESCENT	AMP MNL	4	561551	561668
C126	HAT RACK-READING LTS	AMP MNL	2	560900	560898
C130	LH CONSOLE SW-READING LTS	SWF	8	-------	561107
C131	LH CONSOLE SW-LUG.DOOR LOCK	SWF	8	-------	561107
C132	LH CONSOLE SW-PUSH & HOS.CHIME	SWF	8	-------	561107
C133	LH CONSOLE SW-JACOB OR RET.	SWF	8	-------	561107
C134	LH CONSOLE SW-CALL	SWF	8	-------	561107
C135	LH SW PANEL-ETHER	SWF	8	-------	561107
C136	LH CONSOLE SW-MIRROR HTR	SWF	8	-------	561107
C137	RH SW PANEL-HEAD LAMP	SWF	8	-------	561107
C138	RH SW PANEL-SPARE	SWF	8	-------	561107
C139	RH SW PANEL-FOG LAMP	SWF	8	-------	561107
C140	FR JCT PANEL-BAT.H/LO	AMP MNL	2	560900	560898
C141	ENGINE COMPT.-B/UP ALARM	PED WP	2	561566	561590
C142	FR SERVICE CPT-LH MARKER LTS	ITT SS	3	561111	561080
C143	RR LH HAT RACK-FEEDING	AMP MNL	9	561661	561662
C144	RR RH HAT RACK-FEEDING	AMP MNL	9	561661	561662
C145	RH HAT RACK-BALLAST	AMP MNL	4	560851	560852
C146	FR SERVICE CPT-RH MARKER LTS	ITT SS	3	561111	561080
C147	RR ROOF LH-EMERGENCY EXIT LTS	AMP MNL	2	560900	560898
C148	RR ROOF RH-EMERGENCY EXIT LTS	AMP MNL	2	560900	560898
C149	LH HAT RACK-BALLAST	AMP MNL	4	560851	560852
C150	FR RH HAT RACK-110V FLUOR	AMP MNL	2	561248	561247
C151	FR LH HAT RACK-110V FLUOR	AMP MNL	2	561248	561247
C152	LH HAT RACK-GENERAL LTS	AMP MNL	3	561667	561550
C153	RH HAT RACK-GENERAL LTS	AMP MNL	3	561667	561550
C154	RH SW PANEL-HAZARD	SWF	8	-------	561107
C155	LH SW PANEL-FAST IDLE	SWF	8	-------	561107
C156	LH SW PANEL-STP ENG.OVER.	SWF	8	-------	561107
C158	RR ROOF AUX. A/C FEEDING	AMP MNL	3	561667	561550
C160	FR SERVICE CPT-INTERFACE	AMP CPC	37	561644	561646
C161	ENGINE DDEC III-ECM	PED	30	-------	561600
C162	ENGINE DDEC III-ACCESSORIES	PED WP	4	561610	561611
C163	ENGINE CPT-COOLANT PROBE	PED MP	2	-------	562350
C164	FR SERVICE JCT BOX	AMP CPC	22	561709	561710
C165	FR SERVICE JCT BOX	AMP CPC	16	561693	561695
C166	UNDER INSTRUMENT PANEL	AMP CPC	16	561639	561640
C167	FR SERVICE CPT-EL. FOOT PEDAL	PED WP	3	561781	561782
C168	FR SERVICE CPT-ODR	DEUTSCH	6	562360	-------
C169	FR SERVICE CPT-WORLD TR.VIM	AMP CPC	16	561638	561640
C172	ENGINE COMPT-WATER TANK HEAT.	PED WP	2	561566	561690
C173	LAV.POTABLE-WATER TANK HEAT.	AMP MNL	2	560900	560898
C175	FR SERV CPT-KNEELING FEEDING	PED WP	3	561781	561782
C177	GALLEY-REFRIGERATOR	AMP MNL	2	561248	561247
C179	RH HAT RACK-110V MONITOR	MOLEX	4	561477	561476 PRIOR REV 008
C181	FR SERV CPT-KNEELING MODULE	AMP MNL	12	561735	561734
C182	FR SERVICE CPT-SPEED SW	AMP HOP	15	-------	562012
C184	FR SERV CPT-KNEEL.MOD.CTRL	AMP MNL	3	-------	561550
C184	FR AXLE-KNEELING PROXIMITY SW	AMP MNL	3	561667	561550
C185	FR SERV CPT-KNEEL.MOD.EXH.	AMP MNL	3	-------	561550

CONNECTORS CODE (C) Page G :2

No.	LOCATION	(NB) TYPE	*PIN CAVITY	*SOCKET HOUSING	HOUSING
C187	FR SERV CPT-KNEEL.MOD.BRK	AMP MNL	3	-------	561550
C187	FR SERVICE JCT BOX-REGSITORS	AMP MNL	6	561552	561515
C188	LH CONSOLE SW-KNEELING	SWF	8	-------	561107
C190	FR SERVICE CPT.-WORLD TR VIM	PED WP	30	-------	561600
C192	GALLEY-FEEDING	AMP CPC	3	561862	561847
C194	GALLEY SW-CONTAINER RH	SWF	8	-------	561107
C195	GALLEY SW-CONTAINER LH	SWF	8	-------	561107
C199	FR SERV. JCT BOX-SERVICE BRK	AMP MNL	3	561667	561550
C200	LH CONSOLE SW-24V FLUOR	SWF	8	-------	561107
C201	UNDER INSTRUMENT PANEL	AMP MNL	2	560900	560898 PRIOR REV. 008
C202	UNDER INSTRUMENT PANEL	AMP CPC	5	561636	561637
C205	LH UNDER DASH-AMPLIF.,LH SPK	BLAUPUNKT	2	561988	------- PRIOR REV. 008
C206	RH CONSOLE-FR DEFROSTER	TC	2	561030	560997
C207	RH CONSOLE-DRV RHEOSTAT	AMP MNL	6	561552	561515
C208	UNDER DASH-DRV HTR MODULE	AMP MNL	9	561670	561669
C209	UNDER DASH-DRV HTR MODULE	AMP MNL	9	561670	561669
C210	LH UNDER DASH-AMPLIF.,LH SPK	BLAUPUNKT	2	561988	------- PRIOR REV. 008
C211	LH CONSOLE-VCR VOLUME	AMP MNL	4	561551	561668 PRIOR REV. 008
C212	LH CONSOLE SW-VCR VIDEO	SWF	8	-------	561107 PRIOR REV. 008
C213	FR ROOF-CLEARANCE LT	AMP MNL	2	560900	560898
C214	UNDER DASH PANEL-TACHOGRAPH	V.D.O.	8	-------	562041
C215	UNDER DASH PANEL-TACHOGRAPH	V.D.O.	8	-------	562043
C216	UNDER DASH PANEL-TACHOGRAPH	AMP MNL	4	560851	560852
C217	FR LH HAT RACK-SPEAKER	AMP MNL	4	561659	561660
C218	FR RH HAT RACK-SPEAKER	AMP MNL	4	561659	561660
C219	DASH RHEOSTAT-P.A. VOLUME	MOLEX	4	561477	561476 PRIOR REV. 008
C220	LH UNDER DASH-P.A. VOLUME	AMP MNL	3	561667	561550 PRIOR REV. 008
C221	LH UNDER DASH-AMPLIFIER FEED	AMP MNL	3	561550	561667 PRIOR REV. 008
C222	LH UNDER DASH-P.A. RADIO	AMP MNL	9	561670	561669 PRIOR REV. 008
C223	LH UNDER DASH-P.A. RADIO	AMP MNL	9	561670	561669 PRIOR REV. 008
C224	LH UNDER DASH-PA & RADIO FEED	AMP MNL	6	561552	561515 PRIOR REV. 008
C225	LH UNDER DASH-PA MICRO OUTLET	AMP MNL	3	561667	561550 PRIOR REV. 008
C226	LH UNDER DASH-PA MICRO OUTLET	AMP MNL	3	561667	561550 PRIOR REV. 008
C227	RH CONSOLE-SPEAKER CONTROL SW	SWF	8	-------	561107 PRIOR REV. 008
C229	LH UNDER DASH-P.A. DRV SPEAKERS	AMP MNL	4	561551	561668 PRIOR REV. 008
C230	ENG.CPT.-FUEL PRIME PUMP SW.	PED WP	2	561566	561690
C231	ENG.CPT.-FUEL PRIME PUMP	PED WP	2	561566	561690
C232	LAST LUGGAGE-INVERTER	AMP MNL	4	561551	561668 PRIOR REV .008
C233	MICRO OUTLET SOCKET	MOLEX	4	561477	561476 PRIOR REV. 008
C234	UNDER INSTRUMENT PANEL-VDO	AMP MNL	4	560851	560852 PRIOR REV. 008
C234	UNDER INSTRUMENT PANEL-VDO	AMP FF	8	-------	562363 PRIOR REV. 008
C235	UNDER INSTRUMENT PANEL-VDO	AMP MNL	4	560851	560852 PRIOR REV. 008
C235	UNDER INSTRUMENT PANEL-VDO	AMP FF	8	-------	562363 PRIOR REV. 008
C236	FR SERVICE CPT CENTER-ABS	AMP CPC	14	561685	561583
C237	FR AXLE CPT-ABS RH SENSOR	WABCO	2	641132	-------
C238	FR AXLE CPT-ABS RH VALVE	WABCO	3	-------	641098
C239	FR AXLE CPT-ABS LH VALVE	WABCO	3	-------	641098
C240	FR AXLE CPT-ABS LH SENSOR	WABCO	2	641132	-------
C241	DRIVE AXLE CPT-ABS	PED WP	6	561606	561607
C242	DRIVE AXLE CPT-ABS LH SENSOR	DEUTSCH	2	562486	562485
C243	DRIVE AXLE CPT-ABS LH VALVE	WABCO	3	-------	641098
C244	DRIVE AXLE CPT-ABS RH VALVE	WABCO	3	-------	641098
C245	DRIVE AXLE CPT-ABS RH SENSOR	DEUTSCH	2	562486	562485
C246	DRIVE AXLE CPT-ABS SPARE	PED WP	4	561610	561611
C247	FR SERVICE CPT-ABS MODULE	WABCO	35	-------	561094
C248	DRIVE AXLE CPT-ABS	PED WP	6	561606	561607
C249	FR SERVICE CPT-ABS/ODEC	PED WP	2	561566	561690
C250	RH SW PANEL-B/UP CANCEL	SWF	8	-------	561107

CONNECTORS CODE (C) Page G :2

No.	LOCATION	(NB) TYPE	*PIN CAVITY	*SOCKET HOUSING	HOUSING
C251	RH SW PANEL-SEAT HTR	SWF	8	-------	561107
C252	LH SW PANEL-SWITCH LT	SWF	2	-------	561837
C254	FR SERVICE JCT BOX-ABS	AMP CPC	16	561693	561695
C255	RH CONSOLE-RADIO	AMP MNL	9	561670	561669 PRIOR REV 008
C257	ENGINE COMPT-WATER HEATER	AMP FF	6	-------	561186
C258	DRIVER GUARD WATER HTR TMER	AMP FF	8	561188	562363
C259	ENGINE COMPT-WATER HEATER	TC	2	561597	-------
C260	ENGINE COMPT-WATER HEATER	TC	1	561073	-------
C261	ENGINE COMPT-WATER HEATER	TC	2	561597	-------
C267	LUGGAGE COMPT. LTS - 1	AMP MNL	2	561248	561247
C268	LUGGAGE COMPT. LTS - 2	AMP MNL	2	561248	561247
C269	LUGGAGE COMPT. LTS - 3 RH	AMP MNL	2	561248	561247
C270	LUGGAGE COMPT. LTS - 3 LH	AMP MNL	2	561248	561247
C271	LUGGAGE COMPT. LTS - 4	AMP MNL	2	561248	561247
C272	FR SERVICE CPT LTS	AMP MNL	2	561248	561247
C274	FR JCT PANEL-DODECS	AMP MNL	15	561987	561986
C276	FR JCT PANEL-ALARM BUZZER	BOSCH	5	-------	561183
C281	LH CONSOLE-FR.DEST. SIGN. SWF		2	-------	561837
C282	FR ROOF-DEST. SIGN. AMP CPC		9	561636	561637
C290	LUGGAGE CPT-DOOR LOCK	AMP MNL	4	560851	560852
C291	LUGGAGE CPT-DOOR LOCK	AMP MNL	4	560851	560852
C292	LUGGAGE CPT-DOOR LOCK	AMP MNL	4	560851	560852
C293	WIPER MOTOR	AMP FF	6	-------	561186
C294	UNDER DASH-WIPER SYST.FEED	AMP MNL	6	561552	561515
C295	UNDER DASH-WIPER PULSE GEN.	AMP FF	6	-------	561186
C296	FR SERVICE CPT-HEAD LTS	ITT SS	3	561111	561080
C298	FR LH HAT RACK-AMPLI.	MOLEX	6	-------	562464 PRIOR REV 008
C299	FR LH HAT RACK-AMPLI.	MOLEX	10	-------	562465 PRIOR REV 008
C302	UNDER DASH-FLASHER MODULE	AMP MNL	2	560900	560898
C309	ENGINE DDEC III-ECM POWER	PED WP	5	-------	562345
C312	ENGINE DDEC III-ECM SIGNAL	PED WP	3	561781	561782
C313	ENGINE DDEC III-OUTPUT	PED WP	4	562398	-------
C314	FR SERVICE CPT-PRESS.SW KNEEL	PED WP	2	561566	561690
C315	FR SERVICE CPT-KNEEL.-ALARM	PED WP	2	561566	561690
C336	FR SERVICE CPT-KNEEL.-ALARM	AMP MNL	2	560900	560898
C326	ENGINE DDEC III- MANUAL TR.	PED WP	4	561610	561611
C364	FR ROOF-DESTINATION SIGN	AMP MNL	3	561667	561550
C365	FR ROOF-DESTINATION SIGN	AMP MNL	2	560900	560898
C368	FR ROOF-DEST. SIGN BALLAST	AMP MNL	3	561667	561550
C369	FR ROOF-DEST. SIGN OPER. SW.	TORRIX	5	-------	562110
C370	FR ROOF-DEST. SIGN FLUOR.	AMP MNL	2	560900	560898
C371	FR ROOF-DEST. SIGN FLUOR.	AMP MNL	2	560900	560898
C372	FR ROOF-DEST. SIGN SPEED SW.	MOLEX	4	561477	561476
C382	ENGINE GENERATOR 12 VAC RLY	PED WP	1	561605	561577
C383	LH UNDER DASH-MICRO W/O WIRE	AMP MNL	2	561248	561247 PRIOR REV 008
C384	LH UNDER DASH-MICRO W/O WIRE	AMP MNL	3	561550	561667 PRIOR REV 008
C385	EVAPORATOR CPT-WATER PUMP	PED WP	2	561566	561590
C386	EVAPORATOR CPT-BYPASS VALVE	PED WP	2	561566	561590
C387	CONDENSER CPT-FAN PRES.SW.	PED WP	2	561566	561590
C394	LH OVER CONSOLE - B/U MONITOR	AMP MNL	4	560851	560852
C395	LH OVER CONSOLE - B/U MONITOR	AMP MNL	6	-------	561103
C396	HAT RACK SPEAKER	MOLEX	4	562507	562503
C400	ENGINE CPT.BLOCK HEATER	PED WP	3	561781	561782
C426	ENGINE 560 RAD.FAN CLUTCH	PED WP	3	561781	561782
C430	DRIVER GUARD WATER HTR TMER	AMP FF	8	561188	562363

CONNECTORS CODE (C) Page G :3

No.	LOCATION	(NB) TYPE	*PIN CAVITY	*SOCKET HOUSING	HOUSING
C450	SOUND SYS.JCT.PANEL	MOLEX	4	562507	562503
C451	WIRELESS MICRO-FIRST CPT.BAG	MOLEX	2	562550	562549
C452	UNDER DASH INSTR.PANEL	MOLEX	2	562550	562549
C453	SOUND SYS.JCT.PANEL-VCP	PED WP	2	561566	561590
C454	SOUND SYS.JCT.PAN.-FILT.VCP	PED WP	2	561566	561590
C455	WIRELESS MICRO-LH HAT-RACK	CINCH	2	562554	562551
C456	WORLD TRANSM.-RETARDER ACCUM.	PED MP	2	-------	562427
C457	WORLD TRANSM.-MAIN CONNECTOR	DEUTSCH	31	562572	562536
C458	WORLD TRANSM.-TURBINE SP.SENS.	PED MP	2	-------	562426
C459	WORLD TRANSM.-ENGINE SP.SENS.	PED MP	2	-------	562426
C460	WORLD TRANSM.-SPEED SENSOR	ITT	2	-------	562541
C461	WORLD TRANSM.-RETARDER TEMP.	PED MP	2	561566	561590
C462	WORLD TRANSM.-RETARD SOL."K"	PED MP	2	-------	562426
C463	WORLD TRANSM.-SENSOR CONN.	DEUTSCH	16	562570	562571
C464	FR SERVICE CPT.-DOL CONN W.T.	PED MP	12	-------	562574
C465	LH CONSOLE-SHIFTER SELECTOR	T & BET	10	-------	562429
C466	FR SERVICE CPT.-RESIS.MOD.	PED WP	3	-------	562428
C467	FR SERVICE CPT.-RESIS.MOD.	PED WP	3	-------	562428
C468	FR SERVICE CPT.-VM MOD.W.T.	PED MP	18	-------	562573
C470	FR SERVICE CPT.-SILENT 1000	AMP MNL	2	561248	561247
C471	FR SERVICE CPT.-SILENT 1000	AMP MNL	2	561248	561247
C472	FR SERVICE CPT.-SILENT 1000	PED WP	2	561566	561690
C473	FR SERVICE CPT.-SILENT 1000	AMP MNL	3	561667	561550
C500	FR JCT PANEL-PRODRIVER	MOLEX	6	562070	562069
C501	RH CONSOLE-PRODRIVER	PED MP	7	562433	-------
C502	DRIVER GUARD PRE-HTR SW.	SWF	8	-------	561107
C503	DRIVER GUARD PRE-HTR SW.	SWF	2	-------	561837
C504	DRIVER GUARD WEBASTO TMER	AMP FF	8	561188	562363
C505	DRIVER GUARD ESPAR TMER	AMP FF	3	-------	562034
C508	RR JCT BOX-MOD.FAN CLUTCH	AMP MNL	6	561552	561515
CA	FR SERVICE CPT-ECU WORLD TR.	T & BET	34	-------	562419
CB	FR SERVICE CPT-ECU WORLD TR.	T & BET	34	-------	562420

CONNECTORS CODE (C)

Page G :1

No.	LOCATION	(NB) TYPE	*PIN CAVITY	*SOCKET HOUSING	HOUSING
C3	UNDER DASH-LH	AMP CPC	37	561645	561646
C7	FR SERVICE CMPT.-CLUTCH SW	ITT SS	3	561111	561080
C8	FR JCT PANEL VCR FEED	AMP MNL	2	561248	561247 PRIOR REV 008
C11	LH CONSOLE SW-MIRROR	AMP MNL	3	561667	561550
C12	LH CONSOLE SW-MIRROR HTR	AMP MNL	2	561248	561247
C13	LH CONSOLE SW-MIRROR	AMP MNL	6	561552	561515
C14	UNDER DASH LH-MIRROR	AMP MNL	9	561670	561669
C15	UNDER DASH RH-MIRROR	AMP MNL	9	561670	561669
C18	UNDER DASH-FIRE ALARM	AMP MNL	2	560900	560898
C19	UNDER DASH-A/C & HEAT SYST.	TC	10	561072	561110
C20	RR JCT BOX DIODES	AMP MNL	9	561670	561669
C21	LUGGAGE COMPT.-LOCK DOOR MOT.	PED	2	-------	562076
C22	ENGINE COMPT.-CYLOP LT	PED WP	2	561566	561690
C26	UNDER INSTRUMENT.-PANEL RHEO.	TC	2	561030	560997
C29	FR SERVICE COMPT.-VM FEED	PED WP	3	561781	561782
C32	RH CONSOLE-DRV TEMP SENSOR	BURNDY	3	-------	561104
C33	FRSERVICE COMPT.DDEC VSS	PED WP	2	561566	561690
C34	RH CONSOLE-DRV TEMP CTRL	BURNDY	6	-------	561103
C35	RECIRULATED AIR GRIL.-SENSER	BURNDY	3	-------	561104
C36	LH CONSOLE SW-CRUISE ON/OFF	SWF	8	-------	561107
C37	LH CONSOLE SW-CRUISE SET	SWF	8	-------	561107
C38	LH CONSOLE SW-CRUISE RESUME	SWF	8	-------	561107
C41	UNDER DASH-FLASHER UNIT	TC	2	-------	561940
C49	LAVATORY NIGHT LTS	AMP MNL	2	560900	560898
C50	RH CONSOLE-PAS. TEMP CTRL	BURNDY	6	-------	561103
C51	RH CONSOLE SW-A/C & HEAT	SWF	8	-------	561107
C52	ENGINE COMPT.-COMPRESSOR OSC	PED WP	2	561566	561690
C53	ENGINE COMPT.-COMPRESSOR OSC	PED WP	2	561566	561690
C54	ENGINE COMPT.-COMPRESSOR OSC	TC	1	560998	560897
C61	ENGINE COMPT.-FUEL FILTER	PED WP	2	561566	561690
C67	LH UNDER DASH-AMPLIF.,RH SPK	BLAUPUNKT	2	561988	-------
C68	LH UNDER DASH-AMPLIF.,RH SPK	BLAUPUNKT	2	561988	-------
C73	LH SW PANEL-MULTIFUNC.LEV.	AMP FF	8	561388	-------
C74	LH SW PANEL-MULTIFUNC.LEV.	AMP FF	6	-------	561108
C78	LUGGAGE COMPT.-DOOR LOCK 4 LH	AMP MNL	4	560851	560852
C79	LUGGAGE COMPT.-DOOR LOCK 4 RH	AMP MNL	4	560851	560852
C80	FR JCT PANEL-LUG.DOOR LOCK	AMP MNL	6	561552	561515
C81	LUGGAGE COMPT.-DOOR LOCK 1 LH	AMP MNL	4	560851	560852
C82	LUGGAGE COMPT.-DOOR LOCK 1 RH	AMP MNL	4	560851	560852
C83	UNDER DASH-FLASHER MODULE	TC	10	561072	561110
C84	UNDER DASH-A/C SYSTEM	TC	3	561091	561071
C85	LUGGAGE COMPT.-DOOR LOCK 3 RH	AMP MNL	4	560851	560852
C86	LUGGAGE COMPT.-DOOR LOCK 3 LH	AMP MNL	4	560851	560852
C88	RR END ROOF-CLEARANCE LTS	AMP MNL	2	560900	560898
C90	RR ROOF AUX. A/C THERMOST.	BURNDY	6	-------	561103
C91	RR ROOF AUX. A/C TMP SENSOR	BURNDY	6	-------	561104
C92	RR ROOF AUX. A/C FAN RH	TC	2	561030	560997
C93	RR ROOF AUX. A/C FAN LH	TC	2	561030	560997
C94	RR ROOF AUX. A/C FAN RES LH	AMP MNL	2	560900	560898
C95	RR ROOF AUX. A/C FAN RES RH	AMP MNL	2	560900	560898
C96	RR ROOF AUX. A/C LIQ SOL VAL	TC	2	561030	560997
C97	RR ROOF AUX. A/C SHUT SOL VAL	AMPHENOL	2	-------	560412
C105	UNDER DASH RH-DRV LIQ SOL VL	TC	2	561030	560997
C106	UNDER DASH RH-DRV WTR VALVE	TC	2	561030	560997
C107	UNDER DASH RH-DRV HTR RH FAN	TC	2	561030	560997
C108	UNDER DASH RH-DRV HTR LH FAN	TC	2	561030	560997
C111	LH CONSOLE SW-DRIVER1TS	SWF	8	-------	561107

CONNECTORS CODE (C)

Page G :1

No.	LOCATION	(NB) TYPE	*PIN CAVITY	*SOCKET HOUSING	HOUSING
C112	LH CONSOLE SW-GENERAL LTS	SWF	8	-------	561107
C114	ENGINE DDEC-SPEED SIGNAL	PED WP	2	561566	561590
C115	RR JCT BOX-ENGINE ACCES.	DEUTSCH	40	562281	562284
C116	DRIVE AXLE COMPT.-AIR DRYER	PED WP	2	-------	562251
C119	ENGINE COMPT.-LH LOWER LAMP	PED WP	6	561606	561607
C120	ENGINE COMPT.-LH LOWER LAMP	PED WP	6	561606	561607
C123	HAT RACK-BALLAST RH	AMP MNL	6	561552	561515
C123	HAT RACK-BALLAST RH	AMP MNL	6	561552	561515
C124	HAT RACK-FLUORESCENT	AMP MNL	4	561551	561668
C125	HAT RACK-FLUORESCENT	AMP MNL	4	561551	561668
C126	HAT RACK-READING LTS	AMP MNL	2	560900	560898
C130	LH CONSOLE SW-READING LTS	SWF	8	-------	561107
C131	LH CONSOLE SW-LUG.DOOR LOCK	SWF	8	-------	561107
C132	LH CONSOLE SW-PUSH & HOS.CHIME	SWF	8	-------	561107
C133	LH CONSOLE SW-JACOB OR RET.	SWF	8	-------	561107
C134	LH CONSOLE SW-CALLEY	SWF	8	-------	561107
C135	LH SW PANEL-ETHER	SWF	8	-------	561107
C136	LH CONSOLE SW-MIRROR HTR	SWF	8	-------	561107
C137	RH SW PANEL-HEAD LAMP	SWF	8	-------	561107
C138	RH SW PANEL-SPARE	SWF	8	-------	561107
C139	RH SW PANEL-FOG LAMP	SWF	8	-------	561107
C140	FR JCT PANEL-BAT.HI/LO	AMP MNL	2	560900	560898
C141	ENGINE COMPT.-B/UP ALARM	PED WP	2	561566	561590
C142	FR SERVICE CPT-LH MARKER LTS	ITT SS	3	561111	561080
C143	RR LH HAT RACK-FEEDING	AMP MNL	9	561661	561662
C144	RR RH HAT RACK-FEEDING	AMP MNL	9	561661	561662
C145	RH HAT RACK-BALLAST	AMP MNL	4	560851	560852
C146	FR SERVICE CPT-RH MARKER LTS	ITT SS	3	561111	561080
C147	RR ROOF LH-EMERGENCY EXIT LTS	AMP MNL	2	560900	560898
C148	RR ROOF RH-EMERGENCY EXIT LTS	AMP MNL	2	560900	560898
C149	LH HAT RACK-BALLAST	AMP MNL	4	560851	560852
C150	FR RH HAT RACK-110V FLUOR	AMP MNL	2	561248	561247
C151	FR LH HAT RACK-110V FLUOR	AMP MNL	2	561248	561247
C152	LH HAT RACK-GENERAL LTS	AMP MNL	3	561667	561550
C153	RH HAT RACK-GENERAL LTS	AMP MNL	3	561667	561550
C154	RH SW PANEL-HAZARD	SWF	8	-------	561107
C155	LH SW PANEL-FAST IDLE	SWF	8	-------	561107
C156	LH SW PANEL-STP ENG.OVER.	SWF	8	-------	561107
C158	RR ROOF AUX. A/C FEEDING	AMP MNL	3	561667	561550
C160	FR SERVICE CPT-INTERFACE	AMP CPC	37	561644	561646
C161	ENGINE DDEC III-EGM	PED	30	-------	561600
C162	ENGINE DDEC III-ACCESSORIES	PED WP	4	561610	561611
C163	ENGINE CPT-COOLANT PROBE	PED MP	2	-------	562350
C164	FR SERVICE JCT BOX	AMP CPC	22	561709	561710
C165	FR SERVICE JCT BOX	AMP CPC	16	561693	561695
C166	UNDER INSTRUMENT PANEL	AMP CPC	16	561639	561640
C167	FR SERVICE CPT-EL. FOOT PEDAL	PED WP	3	561781	561782
C168	FR SERVICE CPT-ODR	DEUTSCH	6	562360	-------
C169	FR SERVICE CPT-WORLD TR. VIM	AMP CPC	16	561638	561640
C172	ENGINE COMPT-WATER TANK HEAT.	PED WP	2	561566	561690
C173	LAV.POTABLE-WATER TANK HEAT.	AMP MNL	2	560900	560898
C175	FR SERV CPT-KNEELING FEEDING	PED WP	3	561781	561782
C177	GALLEY-REFRIGERATOR	AMP MNL	2	561248	561247
C179	RH HAT RACK-110V MONITOR	MOLEX	4	561477	561476 PRIOR REV 008
C181	FR SERV CPT-KNEELING MODULE	AMP MNL	12	561735	561734
C182	FR SERVICE CPT-SPEED SW	AMP HOP	15	-------	562012
C184	FR SERV CPT-KNEEL MOD. CTRL	AMP MNL	3	-------	561550
C184	FR AXLE-KNEELING PROXIMITY SW	AMP MNL	3	561667	561550
C185	FR SERV CPT-KNEEL MOD. EXH.	AMP MNL	3	-------	561550

CONNECTORS CODE (C)

Page G :2

No.	LOCATION	(NB) TYPE	*PIN CAVITY	*SOCKET HOUSING	HOUSING
C187	FR SERV CPT-KNEEL MOD.BRK	AMP MNL	3	-------	561550
C187	FR SERVICE JCT BOX-REGSITORS	AMP MNL	6	561552	561515
C188	LH CONSOLE SW-KNEELING	SWF	8	-------	561107
C190	FR SERVICE CPT.-WORLD TR VIM	PED WP	30	-------	561600
C192	GALLEY-FEEDING	AMP CPC	3	561862	561847
C194	GALLEY SW-CONTAINER RH	SWF	8	-------	561107
C195	GALLEY SW-CONTAINER LH	SWF	8	-------	561107
C199	FR SERV. JCT BOX-SERVICE BRK	AMP MNL	3	561667	561550
C200	LH CONSOLE SW-24V FLUOR	SWF	8	-------	561107
C201	UNDER INSTRUMENT PANEL	AMP MNL	2	560900	560898 PRIOR REV. 008
C202	UNDER INSTRUMENT PANEL	AMP CPC	5	561636	561637
C205	LH UNDER DASH-AMPLIF.,LH SPK	BLAUPUNKT	2	561988	------- PRIOR REV. 008
C206	RH CONSOLE-FR DEFROSTER	TC	2	561030	560997
C207	RH CONSOLE-DRV RHEOSTAT	AMP MNL	6	561552	561515
C208	UNDER DASH-DRV HTR MODULE	AMP MNL	9	561670	561669
C209	UNDER DASH-DRV HTR MODULE	AMP MNL	9	561670	561669
C210	LH UNDER DASH-AMPLIF.,LH SPK	BLAUPUNKT	2	561988	------- PRIOR REV. 008
C211	RH SW PANEL-VOLUME	AMP MNL	4	561551	561668 PRIOR REV. 008
C212	LH CONSOLE SW-VCR VIDEO	SWF	8	-------	561107 PRIOR REV. 008
C213	FR ROOF-CLEARANCE LT	AMP MNL	2	560900	560898
C214	UNDER DASH PANEL-TACHOGRAPH	V.D.O.	8	-------	562041
C215	UNDER DASH PANEL-TACHOGRAPH	V.D.O.	8	-------	562043
C216	UNDER DASH PANEL-TACHOGRAPH	AMP MNL	4	560851	560852
C217	FR LH HAT RACK-SPEAKER	AMP MNL	4	561659	561660
C218	FR RH HAT RACK-SPEAKER	AMP MNL	4	561659	561660
C219	DASH RHEOSTAT-P.A. VOLUME	MOLEX	4	561477	561476 PRIOR REV. 008
C220	LH UNDER DASH-P.A. VOLUME	AMP MNL	3	561667	561550 PRIOR REV. 008
C221	LH UNDER DASH-AMPLIFIER FEED	AMP MNL	3	561550	561667 PRIOR REV. 008
C222	LH UNDER DASH-P.A. RADIO	AMP MNL	9	561670	561669 PRIOR REV. 008
C223	LH UNDER DASH-P.A. RADIO	AMP MNL	9	561670	561669 PRIOR REV. 008
C224	LH UNDER DASH-PA & RADIO FEED	AMP MNL	6	561552	561515 PRIOR REV. 008
C225	LH UNDER DASH-PA MICRO OUTLET	AMP MNL	3	561667	561550 PRIOR REV. 008
C226	LH UNDER DASH-PA MICRO OUTLET	AMP MNL	3	561667	561550 PRIOR REV. 008
C228	FR SERVICE CONSOLE-SPEAKER CONTROL	SW SWF	8	-------	561107 PRIOR REV. 008
C229	LH UNDER DASH-PA DRV SPEAKERS	AMP MNL	4	561551	561668 PRIOR REV. 008
C230	ENG.CPT.-FUEL PRIME PUMP SW.	PED WP	2	561566	561690
C231	ENG.CPT.-FUEL PRIME PUMP	PED WP	2	561566	561690
C232	LAST LUGGAGE-INVERTER	AMP MNL	4	561551	561668 PRIOR REV .008
C233	MICRO OUTLET SOCKET	MOLEX	4	561477	561476 PRIOR REV. 008
C234	UNDER INSTRUMENT PANEL-VDO	AMP MNL	4	560851	560852 PRIOR REV. 008
C234	UNDER INSTRUMENT PANEL-VDO	AMP FF	8	-------	562363 PRIOR REV .008
C235	UNDER INSTRUMENT PANEL-VDO	AMP MNL	4	560851	560852 PRIOR REV. 008
C235	UNDER INSTRUMENT PANEL-VDO	AMP FF	8	-------	562363 PRIOR REV. 008
C236	FR SERVICE CPT CENTER-ABS	AMP CPC	14	561565	561583
C237	FR AXLE CPT-ABS RH SENSOR	WABCO	2	641132	-------
C238	FR AXLE CPT-ABS RH VALVE	WABCO	3	-------	641098
C239	FR AXLE CPT-ABS LH VALVE	WABCO	3	-------	641098
C240	FR AXLE CPT-ABS LH SENSOR	WABCO	2	641132	-------
C241	DRIVE AXLE CPT-ABS	PED WP	6	561606	561607
C242	DRIVE AXLE CPT-ABS LH SENSOR	DEUTSCH	2	562486	562485
C243	DRIVE AXLE CPT-ABS LH VALVE	WABCO	3	-------	641098
C244	DRIVE AXLE CPT-ABS RH VALVE	WABCO	3	-------	641098
C245	DRIVE AXLE CPT-ABS RH SENSOR	DEUTSCH	2	562486	562485
C246	DRIVE AXLE CPT-ABS SPARE	PED WP	4	561610	561611
C247	FR SERVICE CPT-ABS MODULE	WABCO	35	-------	561094
C248	DRIVE AXLE CPT-ABS	PED WP	6	561606	561607
C249	FR SERVICE CPT-ABS/ODEC	PED WP	2	561566	561690
C250	RH SW PANEL-B/UP CANCEL	SWF	8	-------	561107

CONNECTORS CODE (C)

Page G :2

No.	LOCATION	(NB) TYPE	*PIN CAVITY	*SOCKET HOUSING	HOUSING
C251	RH SW PANEL-SEAT HTR	SWF	8	-------	561107
C252	LH SW PANEL-SWITCH LT	SWF	2	-------	561837
C254	FR SERVICE JCT BOX-ABS	AMP CPC	16	561693	561695
C255	RH CONSOLE-RADIO	AMP MNL	9	561670	561669 PRIOR REV 008
C257	ENGINE COMPT-WATER HEATER	AMP FF	6	-------	561186
C258	DRIVER GUARD WATER HTR TIMER	AMP FF	8	561188	562363
C259	ENGINE COMPT-WATER HEATER	TC	2	561597	-------
C260	ENGINE COMPT-WATER HEATER	TC	1	561073	-------
C261	ENGINE COMPT-WATER HEATER	TC	2	561597	-------
C267	LUGGAGE COMPT, LTS - 1	AMP MNL	2	561248	561247
C268	LUGGAGE COMPT, LTS - 2	AMP MNL	2	561248	561247
C269	LUGGAGE COMPT, LTS - 3 RH	AMP MNL	2	561248	561247
C270	LUGGAGE COMPT, LTS - 3 LH	AMP MNL	2	561248	561247
C271	LUGGAGE COMPT, LTS - 4	AMP MNL	2	561248	561247
C272	FR SERVICE CPT LTS	AMP MNL	2	561248	561247
C274	FR JCT PANEL-DODECS	AMP MNL	15	561987	561986
C276	FR JCT PANEL-ALARM BUZZER	BOSCH	5	-------	561183
C281	LH CONSOLE-FR.DEST. SIGN.	SWF	2	-------	561837
C282	FR ROOF-DEST. SIGN.	AMP CPC	9	561636	561637
C290	LUGGAGE CPT-DOOR LOCK	AMP MNL	4	560851	560852
C291	LUGGAGE CPT-DOOR LOCK	AMP MNL	4	560851	560852
C292	LUGGAGE CPT-DOOR LOCK	AMP MNL	4	560851	560852
C293	WIPER MOTOR	AMP FF	6	-------	561186
C294	UNDER DASH-WIPER SYST.FEED	AMP MNL	6	561552	561515
C295	UNDER DASH-WIPER PULSE GEN.	AMP FF	6	-------	561186
C296	FR SERVICE CPT-HEAD LTS	ITT SS	3	561111	561080
C298	FR LH HAT RACK-AMPLI.	MOLEX	6	-------	562464 PRIOR REV 008
C299	FR LH HAT RACK-AMPLI.	MOLEX	10	-------	562465 PRIOR REV 008
C302	UNDER DASH-FLASHER MODULE	AMP MNL	2	560900	560898
C309	ENGINE DDEC III-EGM POWER	PED WP	5	-------	562345
C312	ENGINE DDEC III-EGM SIGNAL	PED WP	3	561781	561782
C313	ENGINE DDEC III-OUTPUT	PED WP	4	562398	-------
C314	FR SERVICE CPT-PRESS.SW KNEEL	PED WP	2	561566	561690
C315	FR SERVICE CPT-KNEEL.-ALARM	PED WP	2	561566	561690
C316	FR SERVICE CPT-KNEEL.-ALARM	AMP MNL	2	560900	560898
C326	ENGINE DDEC III- MANUAL TR.	PED WP	4	561610	561611
C364	FR ROOF-DESTINATION SIGN	AMP MNL	3	561667	561550
C365	FR ROOF-DESTINATION SIGN	AMP MNL	2	560900	560898
C368	FR ROOF-DEST.SIGN BALLAST	AMP MNL	3	561667	561550
C369	FR ROOF-DEST. SIGN OPER. SW.	TORRIX	5	-------	562110
C370	FR ROOF-DEST. SIGN FLUOR.	AMP MNL	2	560900	560898
C371	FR ROOF-DEST. SIGN FLUOR.	AMP MNL	2	560900	560898
C372	FR ROOF-DEST.SIGN SPEED SW.	MOLEX	4	561477	561476
C382	DRIVE GENERATOR 12 VAC RLY	PED WP	1	561605	561577
C383	LH UNDER DASH-MICRO W/O WIRE	AMP MNL	2	561248	561247 PRIOR REV 008
C384	LH UNDER DASH-MICRO W/O WIRE	AMP MNL	3	561550	561667 PRIOR REV 008
C385	EVAPORATOR CPT-WATER PUMP	PED WP	2	561566	561590
C386	EVAPORATOR CPT-BYPASS VALVE	PED WP	2	561566	561590
C387	CONDENSER CPT-FAN PRES.SW.	PED WP	2	561566	561590
C394	LH OVER CONSOLE - B/U MONITOR	AMP MNL	4	560851	560852
C395	LH OVER CONSOLE - B/U MONITOR	AMP FF	5	-------	562110
C396	HAT RACK SPEAKER	MOLEX	4	562507	562503
C400	ENGINE CPT.BLOCK HEATER	PED WP	3	561781	561782
C426	ENGINE 560 RAD.FAN CLUTCH	PED WP	3	561781	561782
C430	DRIVER GUARD WATER HTR TIMER	AMP FF	8	561188	562363

CONNECTORS CODE (C)

Page G :2

No.	LOCATION	(NB) TYPE	*PIN CAVITY	*SOCKET HOUSING	HOUSING
C450	SOUND SYS.-JCT.PANEL	MOLEX	4	562507	562503
C451	WIRELESS MICRO-FIRST CPT BAC	MOLEX	2	562550	562549
C452	UNDER DASH INSTR.PANEL	MOLEX	2	562550	562549
C453	SOUND SYS.-JCT.PANEL-VCP	PED WP	2	561566	561590
C454	SOUND SYS.-JCT.PAN.-FILT.-VCP	PED WP	2	561566	561590
C455	WIRELESS MICRO-LH HAT-RACK	CINCH	2	562554	562551
C456	WORLD TRANSM.-REARGER ACCUM.	PED MP	2	-------	562427
C457	WORLD TRANSM.-MAIN CONNECTOR	DEUTSCH	31	562572	562536
C458	WORLD TRANSM.-TURBINE SP.SENS	PED MP	2	-------	562426
C459	WORLD TRANSM.-ENGINE SP.SENS.	PED MP	2	-------	562426
C460	WORLD TRANSM.-PRESSENSOR	ITT	2	-------	562541
C461	WORLD TRANSM.-RETARDER TEMP.	PED MP	2	561566	561590
C462	WORLD TRANSM.-RETARD SOL."K"	PED MP	2	-------	562426
C463	WORLD TRANSM.-SENSOR CONN.	DEUTSCH	16	562570	562571
C464	FR SERVICE CPT.-IDL CONN W.T.	PED MP	12	-------	562574
C465	LH CONSOLE-SHIFTER SELECTOR	T & BET	10	-------	562429
C466	FR SERVICE CPT.-RESIS. MOD.	PED WP	3	-------	562428
C467	FR SERVICE CPT.-RESIS. MOD.	PED WP	3	-------	562428
C468	FR SERVICE CPT.-VM MOD. W.T.	PED MP	18	-------	562573
C470	FR SERVICE CPT.-SILENT 1000	AMP MNL	2	561248	561247
C471	FR SERVICE CPT.-SILENT 1000	AMP MNL	2	561248	561247
C472	FR SERVICE CPT.-SILENT 1000	PED WP	2	561566	561690
C473	FR SERVICE CPT.-SILENT 1000	AMP MNL	3	561667	561550
C475	FR SERVICE CPT-SPEED SIGN CON	DEUTSCH	6	-------	562581
C475M	FR SERVICE CPT-SPEED SIGN M.T.	DEUTSCH	6	562583	-------
C475W	FR SERVICE CPT-SPEED SIGN W.T.	DEUTSCH	6	562583	-------
C500	FR JCT PANEL-PRODRIVER	MOLEX	6	562070	562069
C501	RH CONSOLE-PRODRIVER	PED MP	7	562433	-------
C502	DRIVER GUARD PRE-HTR SW.	SWF	8	-------	561107
C503	DRIVER GUARD PRE-HTR SW.	SWF	2	-------	561837
C504	DRIVER GUARD WEBASTO TIMER	AMP FF	8	561188	562363
C505	DRIVER GUARD ESPAR TIMER	AMP FF	3	-------	562034
C508	RR JCT BOX-MOD.FAN CLUTCH	AMP MNL	6	561552	561515
CA	FR SERVICE CPT-ECU WORLD TR.	T & BET	34	-------	562419
CB	FR SERVICE CPT-ECU WORLD TR.	T & BET	34	-------	562420

NO.	LOCATION	TYPE	(NB) CAVITY	*PIN HOUSING	*SOCKET HOUSING
C3	UNDER DASH-LH	AMP CPC	37	561645	561646
C7	FR SERVICE COMPT.-CLUTCH SW	ITT SS	3	561111	561080
C8	FR JCT PANEL VCR FEED	AMP MNL	2	561248	561247 PRIOR REV 008
C11	LH CONSOLE SW-MIRROR	AMP MNL	3	561667	561550
C12	LH CONSOLE SW-MIRROR HTR	AMP MNL	2	561248	561247
C13	LH CONSOLE SW-MIRROR	AMP MNL	6	561552	561515
C14	UNDER DASH LH-MIRROR	AMP MNL	9	561670	561669
C15	UNDER DASH RH-MIRROR	AMP MNL	9	561670	561669
C18	UNDER DASH-FIRE ALARM	AMP MNL	2	560900	560898
C19	UNDER DASH-A/C & HEAT SYST.	TC	10	561072	561110
C20	RR JCT BOX DIODES	AMP MNL	9	561670	561669
C21	LUGGAGE COMPT.-LOCK DOOR MOT.	PED	2	------	562076
C22	ENGINE COMPT.-CYCLOP LT	PED WP	2	561566	561690
C26	UNDER INSTRUMENT.-PANEL RHEO.	TC	2	561030	560997
C29	FR SERVICE COMPT.-VIM FEED	PED WP	3	561781	561782
C32	RH CONSOLE-DRV TEMP SENSOR	BURNDY	3	------	561104
C33	FRSERVICE COMPT. DDEC VSS	PED WP	2	561566	561690
C34	RH CONSOLE-DRV TEMP CTRL	BURNDY	6	------	561103
C35	RECIRULATED AIR GRIL.-SENSER	BURNDY	3	------	561104
C36	LH CONSOLE SW-CRUISE ON/OFF	SWF	8	------	561107
C37	LH CONSOLE SW-CRUISE SET	SWF	8	------	561107
C38	LH CONSOLE SW-CRUISE RESUME	SWF	8	------	561107
C41	UNDER DASH-FLASHER UNIT	TC	2	------	561940
C49	LAVATORY NIGHT LTS	AMP MNL	2	560900	560898
C50	RH CONSOLE-PAS. TEMP CTRL	BURNDY	6	------	561103
C51	RH CONSOLE SW-A/C & HEAT	SWF	8	------	561107
C52	ENGINE COMPT.-COMPRESSOR 05G	PED WP	2	561566	561690
C53	ENGINE COMPT.-COMPRESSOR 05G	PED WP	2	561566	561690
C54	ENGINE COMPT.-COMPRESSOR 05G	TC	1	560098	560697
C61	ENGINE COMPT.-FUEL FILTER	PED WP	2	561566	561690
C65	UNDER LH HAT RACK	MOLEX	4	561477	561476
C67	LH UNDER DASH-AMPLIF. RH SPK	BLAUPUNKT	2	561988	------
C68	LH UNDER DASH-AMPLIF. RH SPK	BLAUPUNKT	2	561988	------
C73	LH SW PANEL-MULTI FUNC. LEV.	AMP FF	8	561188	------
C74	LH SW PANEL-MULTI FUNC. LEV.	AMP FF	6	------	561108
C78	LUGGAGE COMPT.-DOOR LOCK 4 LH	AMP MNL	4	560851	560852
C79	LUGGAGE COMPT.-DOOR LOCK 4 RH	AMP MNL	4	560851	560852
C80	FR JCT PANEL-LUG. DOOR LOCK	AMP MNL	6	561552	561515
C81	LUGGAGE COMPT.-DOOR LOCK 1 LH	AMP MNL	4	560851	560852
C82	LUGGAGE COMPT.-DOOR LOCK 1 RH	AMP MNL	4	560851	560852
C83	UNDER DASH-FLASHER MODULE	TC	10	561072	561110
C84	UNDER DASH-A/C SYSTEM	TC	3	561091	561071
C85	LUGGAGE COMPT.-DOOR LOCK 3 RH	AMP MNL	4	560851	560852
C86	LUGGAGE COMPT.-DOOR LOCK 3 LH	AMP MNL	4	560851	560852
C88	RR END ROOF-CLEARANCE LTS	AMP MNL	2	560900	560898
C90	RR ROOF AUX. A/C THERMOST.	BURNDY	6	------	561103
C91	RR ROOF AUX. A/C TMP SENSOR	BURNDY	6	------	561104
C92	RR ROOF AUX. A/C FAN RH	TC	2	561030	560997
C93	RR ROOF AUX. A/C FAN LH	TC	2	561030	560997
C94	RR ROOF AUX. A/C FAN RES LH	AMP MNL	2	560900	560898
C95	RR ROOF AUX. A/C FAN RES RH	AMP MNL	2	560900	560898
C96	RR ROOF AUX. A/C LIQ SOL VAL	TC	2	561030	560997
C97	RR ROOF AUX. A/C SHUT SOL VAL	AMPHENOL	2	------	560412
C105	UNDER DASH RH-DRV LIQ SOL VL	TC	2	561030	560997
C106	UNDER DASH RH-DRV WTR VALVE	TC	2	561030	560997
C107	UNDER DASH RH-DRV HTR RH FAN	TC	2	561030	560997
C108	UNDER DASH RH-DRV HTR LH FAN	TC	2	561030	560997
C111	LH CONSOLE SW-DRIVER'LTS	SWF	8	------	561107

CONNECTORS CODE (C) PAGE G : 1

NO.	LOCATION	TYPE	(NB) CAVITY	*PIN HOUSING	*SOCKET HOUSING
C112	LH CONSOLE SW-GENERAL LTS	SWF	8	------	561107
C114	ENGINE DDEC-SPEED SIGNAL	PED WP	2	561566	561590
C115	RR JCT BOX-ENGINE ACCES.	DEUTSCH	40	562281	562284
C116	DRIVE AXLE COMPT.-AIR DRYER	PED MP	2	------	562251
C119	ENGINE COMPT.-LH LOWER LAMP	PED WP	6	561606	561607
C120	ENGINE COMPT.-LH LOWER LAMP	PED WP	6	561606	561607
C123	HAT RACK-BALLAST RH	AMP MNL	6	561552	561515
C123	HAT RACK-BALLAST RH	AMP MNL	6	561552	561515
C124	HAT RACK-FLUORESCENT	AMP MNL	4	561551	561668
C125	HAT RACK-FLUORESCENT	AMP MNL	4	561551	561668
C126	HAT RACK-READING LTS	AMP MNL	2	560900	560898
C130	LH CONSOLE SW-READING LTS	SWF	8	------	561107
C131	LH CONSOLE SW-LUG.DOOR LOCK	SWF	8	------	561107
C132	LH CONSOLE SW-PAS & HOS CHIME	SWF	8	------	561107
C133	LH CONSOLE SW-JACOB OR RET.	SWF	8	------	561107
C134	LH CONSOLE SW-GALLEY	SWF	8	------	561107
C135	LH SW PANEL-ETHER	SWF	8	------	561107
C136	LH CONSOLE SW-MIRROR HTR	SWF	8	------	561107
C137	RH SW PANEL-HEAD LAMP	SWF	8	------	561107
C138	RH SW PANEL-SPARE	SWF	8	------	561107
C139	RH SW PANEL-FOG LAMP	SWF	8	------	561107
C140	FR JCT PANEL-BAT. HI/LO	AMP MNL	2	560900	560898
C141	ENGINE COMPT.-B/UP ALARM	PED WP	2	561566	561590
C142	FR SERVICE CPT-LH MARKER LTS	ITT SS	3	561111	561080
C143	RR LH HAT RACK-FEEDING	AMP MNL	9	561661	561662
C144	RR RH HAT RACK-FEEDING	AMP MNL	9	561661	561662
C145	RH HAT RACK-BALLAST	AMP MNL	4	560851	560852
C146	FR SERVICE CPT-RH MARKER LTS	ITT SS	3	561111	561080
C147	RR ROOF LH-EMERGENCY EXIT LTS	AMP MNL	2	560900	560898
C148	RR ROOF RH-EMERGENCY EXIT LTS	AMP MNL	2	560900	560898
C149	LH HAT RACK-BALLAST	AMP MNL	4	560851	560852
C150	FR RH HAT RACK-110V FLUOR	AMP MNL	2	561248	561247
C151	FR LH HAT RACK-110V FLUOR	AMP MNL	2	561248	561247
C152	LH HAT RACK-GENERAL LTS	AMP MNL	3	561667	561550
C153	RH HAT RACK-GENERAL LTS	AMP MNL	3	561667	561550
C154	RH SW PANEL-HAZARD	SWF	8	------	561107
C155	LH SW PANEL-FAST IDLE	SWF	8	------	561107
C156	LH SW PANEL-STP ENG. OVER.	SWF	8	------	561107
C158	RR ROOF AUX. A/C FEEDING	AMP MNL	3	561667	561550
C160	FR SERVICE CPT-INTERFACE	AMP CPC	37	561644	561646
C161	ENGINE DDEC III-ECM	PED	30	------	561600
C162	ENGINE DDEC III-ACCESSORIES	PED WP	4	561610	561611
C163	ENGINE CPT-COOLANT PROBE	PED MP	2	------	562350
C164	FR SERVICE JCT BOX	AMP CPC	22	561709	561710
C165	FR SERVICE JCT BOX	AMP CPC	16	561693	561695
C166	UNDER INSTRUMENT PANEL	AMP CPC	16	561639	561640
C167	FR SERVICE CPT-EL. FOOT PEDAL	PED WP	3	561781	561782
C168	FR SERVICE CPT-DDR	DEUTSCH	6	562360	------
C169	FR SERVICE CPT-WORLD TR. VIW	AMP CPC	16	561638	561640
C172	ENGINE COMPT-WATER TANK HEAT.	PED WP	2	561566	561690
C173	LAV.POTABLE-WATER TANK HEAT.	AMP MNL	2	560900	560898
C175	FR SERV CPT-KNEELING FEEDING	PED WP	3	561781	561782
C177	GALLEY-REFRIGERATOR	AMP MNL	2	561248	561247
C179	RH HAT RACK-110V MONITOR	MOLEX	4	561477	561476 PRIOR REV 008
C181	FR SERV CPT-KNEELING MODULE	AMP MNL	12	561735	561734
C182	FR SERVICE CPT-SPEED SW	AMP HDP	15	------	562012
C184	FR SERV CPT-KNEEL. MOD. CTRL	AMP MNL	3	------	561550
C184	FR AXLE-KNEELING PROXIMITY SW	AMP MNL	3	561667	561550
C185	FR SERV CPT-KNEEL. MOD. EXH.	AMP MNL	3	------	561550

NO.	LOCATION	TYPE	(NB) CAVITY	*PIN HOUSING	*SOCKET HOUSING
C187	FR SERV CPT-KNEEL. MOD. BRK	AMP MNL	3	------	561550
C187	FR SERVICE JCT BOX-RESISTORS	AMP MNL	6	561552	561515
C188	LH CONSOLE SW-KNEELING	SWF	8	------	561107
C190	FR SERVICE CPT.-WORLD TR VIM	PED WP	30	------	561600
C192	GALLEY-FEEDING	AMP CPC	3	561862	561847
C194	GALLEY SW-CONTAINER RH	SWF	8	------	561107
C195	GALLEY SW-CONTAINER LH	SWF	8	------	561107
C199	FR SERV. JCT BOX-SERVICE BRK	AMP MNL	3	561667	561550
C200	LH CONSOLE SW-24V FLUOR	SWF	8	------	561107
C201	UNDER INSTRUMENT PANEL	AMP MNL	2	560900	560898 PRIOR REV. 008
C202	UNDER INSTRUMENT PANEL	AMP CPC	9	561636	561637
C205	LH UNDER DASH-AMPLIF. LH SPK	BLAUPUNKT	2	561988	------ PRIOR REV. 008
C206	RH CONSOLE-FR DEFROSTER	TC	2	561030	560997
C207	RH CONSOLE-DRV RHEOSTAT	AMP MNL	6	561552	561515
C208	UNDER DASH-DRV HTR MODULE	AMP MNL	9	561670	561669
C209	UNDER DASH-DRV HTR MODULE	AMP MNL	9	561670	561669
C210	LH UNDER DASH-AMPLIF. LH SPK	BLAUPUNKT	2	561988	------ PRIOR REV. 008
C211	RH CONSOLE-VCR VOLUME	AMP MNL	4	561551	561668 PRIOR REV. 008
C212	LH CONSOLE SW-VCR VIDEO	SWF	8	------	561107 PRIOR REV. 008
C213	FR ROOF-CLEARANCE LT	AMP MNL	2	560900	560898
C214	UNDER DASH PANEL-TACHOGRAPH	V.D.O.	8	------	562041
C215	UNDER DASH PANEL-TACHOGRAPH	V.D.O.	8	------	562043
C216	UNDER DASH PANEL-TACHOGRAPH	AMP MNL	4	560851	560852
C217	FR LH HAT RACK-SPEAKER	AMP MNL	4	561659	561660
C218	FR RH HAT RACK-SPEAKER	AMP MNL	4	561659	561660
C219	DASH RHEOSTAT-P.A. VOLUME	MOLEX	4	561477	561476 PRIOR REV. 008
C220	LH UNDER DASH-P.A. VOLUME	AMP MNL	3	561667	561550 PRIOR REV. 008
C221	LH UNDER DASH-AMPLIFIER FEED	AMP MNL	3	561550	561667 PRIOR REV. 008
C222	LH UNDER DASH-P.A. RADIO	AMP MNL	9	561670	561669 PRIOR REV. 008
C223	LH UNDER DASH-P.A. RADIO	AMP MNL	9	561670	561669 PRIOR REV. 008
C224	LH UNDER DASH-PA & RADIO FEED	AMP MNL	6	561552	561515 PRIOR REV. 008
C225	LH UNDER DASH-PA MICRO OUTLET	AMP MNL	3	561667	561550 PRIOR REV. 008
C226	LH UNDER DASH-PA MICRO OUTLET	AMP MNL	3	561667	561550 PRIOR REV. 008
C227	RH CONSOLE-SPEAKER CONTROL SW	SWF	8	------	561107 PRIOR REV. 008
C229	LH UNDER DASH-PA DRV SPEAKERS	AMP MNL	4	561551	561668 PRIOR REV. 008
C230	ENG.CPT.-FUEL PRIME PUMP SW.	PED WP	2	561566	561690
C231	ENG.CPT.-FUEL PRIME PUMP	PED WP	2	561566	561690
C232	LAST LUGGAGE-INVERTER	AMP MNL	4	561551	561668 PRIOR REV .008
C233	MICRO OUTLET SOCKET	MOLEX	4	561477	561476 PRIOR REV. 008
C234	UNDER INSTRUMENT PANEL-VDO	AMP MNL	4	560851	560852 PRIOR REV. 008
C234	UNDER INSTRUMENT PANEL-VDO	AMP FF	8	------	562363 PRIOR REV .008
C235	UNDER INSTRUMENT PANEL-VDO	AMP MNL	4	560851	560852 PRIOR REV. 008
C235	UNDER INSTRUMENT PANEL-VDO	AMP FF	8	------	562363 PRIOR REV. 008
C236	FR SERVICE CPT CENTER-ABS	AMP CPC	14	561585	561583
C237	FR AXLE CPT-ABS RH SENSOR	WABCO	2	641132	------
C238	FR AXLE CPT-ABS RH VALVE	WABCO	3	------	641098
C239	FR AXLE CPT-ABS LH VALVE	WABCO	3	------	641098
C240	FR AXLE CPT-ABS LH SENSOR	WABCO	2	641132	------
C241	DRIVE AXLE CPT-ABS	PED WP	6	561606	561607
C242	DRIVE AXLE CPT-ABS LH SENSOR	DEUTSCH	2	562486	562485
C243	DRIVE AXLE CPT-ABS LH VALVE	WABCO	3	------	641098
C244	DRIVE AXLE CPT-ABS RH VALVE	WABCO	3	------	641098
C245	DRIVE AXLE CPT-ABS RH SENSOR	DEUTSCH	2	562486	562485
C246	DRIVE AXLE CPT-ABS SPARE	PED WP	4	561610	561611
C247	FR SERVICE CPT-ABS MODULE	WABCO	35	------	561094
C248	DRIVE AXLE CPT-ABS	PED WP	6	561606	561607
C249	FR SERVICE CPT-ABS/DDEC	PED WP	2	561566	561690
C250	RH SW PANEL-B/UP CANCEL	SWF	8	------	561107

CONNECTORS CODE (C) PAGE G : 2

NO.	LOCATION	TYPE	(NB) CAVITY	*PIN HOUSING	*SOCKET HOUSING
C251	RH SW PANEL-SEAT HTR	SWF	8	------	561107
C252	LH SW PANEL-SWITCH LT	SWF	2	------	561837
C254	FR SERVICE JCT BOX-ABS	AMP CPC	16	561693	561695
C255	RH CONSOLE-RADIO	AMP MNL	9	561670	561669 PRIOR REV 008
C257	ENGINE COMPT-WATER HEATER	AMP FF	6	------	561186
C258	DRIVER GUARD WATER HTR TIMER	AMP FF	8	561188	562363
C259	ENGINE COMPT-WATER HEATER	TC	2	561597	------
C260	ENGINE COMPT-WATER HEATER	TC	1	561073	------
C261	ENGINE COMPT-WATER HEATER	TC	2	561597	------
C267	LUGGAGE COMPT. LTS - 1	AMP MNL	2	561248	561247
C268	LUGGAGE COMPT. LTS - 2	AMP MNL	2	561248	561247
C269	LUGGAGE COMPT. LTS - 3 RH	AMP MNL	2	561248	561247
C270	LUGGAGE COMPT. LTS - 3 LH	AMP MNL	2	561248	561247
C271	LUGGAGE COMPT. LTS - 4	AMP MNL	2	561248	561247
C272	FR SERVICE CPT LTS	AMP MNL	2	561248	561247
C274	FR JCT PANEL-DIODES	AMP MNL	15	561987	561986
C276	FR JCT PANEL-ALARM BUZZER	BOSCH	5	------	561183
C281	LH CONSOLE-FR. DEST. SIGN.	SWF	2	------	561837
C282	FR ROOF-DEST. SIGN.	AMP CPC	9	561636	561637
C290	LUGGAGE CPT-DOOR LOCK	AMP MNL	4	560851	560852
C291	LUGGAGE CPT-DOOR LOCK	AMP MNL	4	560851	560852
C292	LUGGAGE CPT-DOOR LOCK	AMP MNL	4	560851	560852
C293	WIPER MOTOR	AMP FF	6	------	561186
C294	UNDER DASH-WIPER SYST. FEED	AMP MNL	6	561552	561515
C295	UNDER DASH-WIPER PULSE GEN.	AMP FF	6	------	561186
C296	FR SERVICE CPT-HEAD LTS	ITT SS	3	561111	561080
C298	FR LH HAT RACK-AMPLI	MOLEX	6	------	562464 PRIOR REV 008
C299	FR LH HAT RACK-AMPLI	MOLEX	10	------	562465 PRIOR REV 008
C302	UNDER DASH-FLASHER MODULE	AMP MNL	2	560900	560898
C309	ENGINE DDEC III-ECM POWER	PED WP	5	------	562345
C312	ENGINE DDEC III-ECM SIGNAL	PED WP	3	561781	561782
C313	ENGINE DDEC III-OUTPUT	PED WP	4	562398	------
C314	FR SERVICE CPT-PRESS.SW KNEEL	PED WP	2	561566	561690
C315	FR SERVICE CPT-KNEEL. ALARM	PED WP	2	561566	561690
C316	FR SERVICE CPT-KNEEL. ALARM	AMP MNL	2	560900	560898
C326	ENGINE DDEC III- MANUAL TR.	PED WP	4	561610	561611
C364	FR ROOF-DESTINATION SIGN	AMP MNL	3	561667	561550
C365	FR ROOF-DESTINATION SIGN	AMP MNL	2	560900	560898
C368	FR ROOF-DEST. SIGN BALLAST	AMP MNL	3	561667	561550
C369	FR ROOF-DEST. SIGN OPER. SW.	TORRIX	5	------	562110
C370	FR ROOF-DEST. SIGN FLUOR.	AMP MNL	2	560900	560898
C371	FR ROOF-DEST. SIGN FLUOR.	AMP MNL	2	560900	560898
C372	FR ROOF-DEST. SIGN SPEED SW.	MOLEX	4	561477	561476
C382	ENGINE GENERATOR 12 VAC RLY	PED WP	1	561605	561577
C383	LH UNDER DASH-MICRO W/O WIRE	AMP MNL	2	561248	561247 PRIOR REV 008
C384	LH UNDER DASH-MICRO W/O WIRE	AMP MNL	3	561550	561667 PRIOR REV 008
C385	EVAPORATOR CPT-WATER PUMP	PED WP	2	561566	561590
C386	EVAPORATOR CPT-BYPASS VALVE	PED WP	2	561566	561590
C387	CONDENSER CPT-FAN PRES. SW.	PED WP	2	561566	561590
C394	LH OVER CONSOLE - B/U MONITOR	AMP MNL	4	560851	560852
C395	LH OVER CONSOLE - B/U MONITOR	AMP	5	------	------
C396	HAT RACK SPEAKER	MOLEX	4	562507	562503
C400	ENGINE CPT.BLOCK HEATER	PED WP	3	561781	561782
C426	ENGINE S60 RAD. FAN CLUTCH	PED WP	3	561781	561782
C430	DRIVER GUARD WATER HTR TIMER	AMP FF	8	561188	562363

NO.	LOCATION	TYPE	(NB) CAVITY	*PIN HOUSING	*SOCKET HOUSING
C450	SOUND SYS. JCT. PANEL	MOLEX	4	562507	562503
C451	WIRELESS MICRO-FIRST CPT BAG	MOLEX	2	562550	562549
C452	UNDER DASH INSTR. PANEL	MOLEX	2	562550	562549
C453	SOUND SYS. JCT.PANEL-VCP	PED WP	2	561566	561590
C454	SOUND SYS.JCT.PAN.-FILT. VCP	PED WP	2	561566	561590
C455	WIRELESS MICRO-LH HAT-RACK	CINCH	2	562554	562551
C456	WORLD TRANSM.-RETARDER ACCUM.	PED MP	2	------	562427
C457	WORLD TRANSM.-MAIN CONNECTOR	DEUTSCH	31	562572	562536
C458	WORLD TRANSM.-TURBINE SP.SENS	PED MP	2	------	562426
C459	WORLD TRANSM.-ENGINE SP.SENS.	PED MP	2	------	562426
C460	WORLD TRANSM.-SPEED SENSOR	ITT	2	------	562541
C461	WORLD TRANSM.-RETARDER TEMP.	PED MP	2	561566	561590
C462	WORLD TRANSM.-RETARD SOL."K"	PED MP	2	------	562426
C463	WORLD TRANSM.-SENSOR CONN.	DEUTSCH	16	562570	562571
C464	FR SERVICE CPT.-DDL CONN W.T.	PED MP	12	------	562574
C465	LH CONSOLE-SHIFTER SELECTOR	T & BET	10	------	562429
C466	FR SERVICE CPT.-RESIS. MOD.	PED WP	3	------	562428
C467	FR SERVICE CPT.-RESIS. MOD.	PED WP	3	------	562428
C468	FR SERVICE CPT.-VIM MOD. W.T.	PED MP	18	------	562573
C470	FR SERVICE CPT.-SILENT 1000	AMP MNL	2	561248	561247
C471	FR SERVICE CPT.-SILENT 1000	AMP MNL	2	561248	561247
C472	FR SERVICE CPT.-SILENT 1000	PED WP	2	561566	561690
C473	FR SERVICE CPT.-SILENT 1000	AMP MNL	3	561667	561550
C475	FR SERVICE CPT-SPEED SIGN CON	DEUTSCH	6	------	562581
C475M	FR SERVICE CPT-SPEED SIGN M.T	DEUTSCH	6	562583	------
C475W	FR SERVICE CPT-SPEED SIGN W.T	DEUTSCH	6	562583	------
C500	FR JCT PANEL-PRODRIVER	MOLEX	6	562070	562069
C501	RH CONSOLE-PRODRIVER	PED MP	7	562433	------
C502	DRIVER GUARD PRE-HTR SW.	SWF	8	------	561107
C503	DRIVER GUARD PRE-HTR SW.	SWF	2	------	561837
C504	DRIVER GUARD WEBASTO TIMER	AMP FF	8	561188	562363
C505	DRIVER GUARD ESPAR TIMER	AMP FF	3	------	562034
C508	RR JCT BOX-MOD.FAN CLUTCH	AMP MNL	6	561552	561515
CA	FR SERVICE CPT-ECU WORLD TR.	T & BET	34	------	562419
CB	FR SERVICE CPT-ECU WORLD TR.	T & BET	34	------	562420

NO.	LOCATION	TYPE	(NB) CAVITY	*PIN HOUSING	*SOCKET HOUSING

				GRD	WIRE	GAUGE/WIRE			
PA.	LOCALISAT		TYPE	CAPTIT	BRIDGES	BRIDGES			
---	---	---	---	---	---	---	---	---	---
G8	UNIBUS DAABR-LE			ARIP GRD	97	20/0.8	20/0.8		
G7	MS SHEETSIDE CONTROL-SLIPSTOR ENT			DTP 00	8	20/0.8	20/0.8		
G8	MS DOT PANEL TOP REAR			ARIP ASYL	5	20/0.8	20/0.8	PRIZE PRIT 0A0	
G8	LE OCTOPUS SW-ACCESSIBIL			ARIP ASYL	5	20/0.8	20/0.8		
G8	LE OCTOPUS SW-ACCESSIBIL			ARIP ASYL	5	20/0.8	20/0.8		
G8	LE OCTOPUS SW-ACCESSIBIL			ARIP ASYL	5	20/0.8	20/0.8		
G8	UNIBUS DAABR-ACCESSIBIL			ARIP ASYL	5	20/0.8	20/0.8		
G8	UNIBUS DAABR-ACCESSIBIL			ARIP ASYL	5	20/0.8	20/0.8		
G8	UNIBUS DAABR-ACCESSIBIL			ARIP ASYL	5	20/0.8	20/0.8		
G8	UNIBUS DAABR-PUSH ALLAIRE			ARIP ASYL	5	20/0.8	20/0.8		
G8	UNIBUS DAABR-AP W DELAY STRT.			TR	10	20/0.8	20/0.8		
G8	MS DOT DRZ DOUBLE			ARIP ASYL	5	20/0.8	20/0.8		
G8	LUBRAGAN GCEXPT-.DOUB DOUB ASYL.PRES				8	----	20/0.8		
G8	MONSTER GCEXPT-.STRLIP LIT			PRES TRP	5	20/0.8	20/0.8		
G8	MONSTER DCEXPTSMOKE-.PASSNG.SENSR.TR				5	20/0.8	20/0.8		
G8	MS SHEETSIDE CONTROL-.TOPS PRESS			PRES TRP	5	20/0.8	20/0.8		
G8	LE OCTOPUS-.DOT DRAIN SENSOR			DRIPSTOP	5	----	20/0.8		
G8	MONSTERSTOP GCEXPT.DRIBS TOOL			PRES TRP	5	20/0.8	20/0.8		
G8	LE OCTOPUS-.DOT DRAIN CONTL			DRIPSTOP	5	----	20/0.8		
G8	DRIPSTOP.LATER ASS SHELL-.SENSORS			DRIPSTOP	5	----	20/0.8		
G8	LE OCTOPUS SW-SHEETSIDE CONTROL			ETRP	6	----	20/0.8		
G8	LE OCTOPUS SW-SHEETSIDE ENT			ETRP	6	----	20/0.8		
G8	LE OCTOPUS SW-SHEETSIDE DRIPSTOP			ETRP	6	----	20/0.8		
G8	UNIBUS DAABR-WLADDERS DOOR			TR	5	----	20/0.8		
G8	LA.PRESTOP DOORST LIGHT			ARIP ASYL	5	20/0.8	20/0.8		
G8	LE OCTOPUS-.P.AA. TOPST CONTL			DRIPSTOP	5	----	20/0.8		
G8	LE OCTOPUS SW-AP W DELAY			ETRP	6	----	20/0.8		
G8	MONSTER GCEXPT-.CONTROPANEL.PRS			PRES TRP	5	20/0.8	20/0.8		
G8	MONSTER GCEXPT-.CONTROPANEL.PRS			PRES TRP	5	20/0.8	20/0.8		
G8	MONSTER GCEXPT-.CONTROPANEL.PRS			PRES TRP	5	20/0.8	20/0.8		
G8	MONSTER GCEXPT-.PUSH.BUTTON			PRES TRP	5	20/0.8	20/0.8		
G8	UNIBUS DAABR-LE DELAY				5	----	20/0.8		
G8	LE OCTOPUS SW-ACCESSIBIL			ETRP	6	----	20/0.8		
G8	LE OCTOPUS SW-ACCESSIBIL			ETRP	6	----	20/0.8		
G8	LE OCTOPUS SW-ACCESSIBIL			ETRP	6	----	20/0.8		
G8	LE OCTOPUS SW-ACCESSIBIL			ETRP	6	----	20/0.8		
G8	LUBRAGAN GCEXPT-.DOUB DOUBLE ASYL				6	----	20/0.8		
G8	LUBRAGAN GCEXPT-.DOUB DOUBLE ASYL				6	----	20/0.8		
G8	LUBRAGAN GCEXPT-.DOUB DOUBLE ASYL				6	----	20/0.8		
G8	UNIBUS DAABR-WLADDERS MINUTES				TR	10	20/0.8	20/0.8	
G8	UNIBUS DAABR-AP STATUS				TR	5	20/0.8	20/0.8	
G8	LUBRAGAN GCEXPT-.DOUB DOUBLE ASYL				6	----	20/0.8		
G8	LUBRAGAN GCEXPT-.DOUB DOUBLE ASYL				6	----	20/0.8		
G8	MS DOT ASYL.AP VERSATIL.			DRIPSTOP	5	----	20/0.8		
G8	MS DOT ASYL.AP UNIT SENSOR			DRIPSTOP	5	----	20/0.8		
G8	MS DOT ASYL.AP RAY LE			TR	5	20/0.8	20/0.8		
G8	MS DOT ASYL.AP RAY LE			TR	5	20/0.8	20/0.8		
G8	MS DOT ASYL.AP RAY LE			ARIP ASYL	5	20/0.8	20/0.8		
G8	MS DOT ASYL.AP RAY DOR LE			ARIP ASYL	5	20/0.8	20/0.8		
G8	MS DOT ASYL.AP LIG.CTL.TAL			TR	5	20/0.8	20/0.8		
G8	MS DOT ASYL.AP SHEET ATL.TAL.ARRIERE				5	----	20/0.8		
G8	UNIBUS DAABR DSR-DOUT LIG.ATL.TR				TR	5	20/0.8	20/0.8	
G8	UNIBUS DAABR DSR-DOUT TRIP VALVE TR				TR	5	20/0.8	20/0.8	
G8	UNIBUS DAABR DSR-DOUT STOP RAY TR				TR	5	20/0.8	20/0.8	
G8	UNIBUS DAABR DSR-DOUT DOOR LE RAY TR				TR	5	20/0.8	20/0.8	
G8	LE OCTOPUS SW-INSTRUMENTIN			ETRP	6	----	20/0.8		

				GRD	WIRE	GAUGE/WIRE			
PA.	LOCALISAT		TYPE	CAPTIT	BRIDGES	BRIDGES			
---	---	---	---	---	---	---	---	---	---
G8	LE OCTOPUS SW-BRAKELAL LIN			ETRP	6	----	20/0.8		
G8	MONSTER DIGRS-STRED STORCLL			PRES TRP	5	20/0.8	20/0.8		
G8	MS DOT DRZ-SENSOR ASSEM.			DRIPSTOP	5	20/0.8	20/0.8		
G8	DRIPSTOP.LATER GCEXPT-.ALM SIRENE			PRES TRP	5	----	20/0.8		
G8	MONSTER GCEXPT-.LE.LUTOPER LARGE			PRES TRP	5	20/0.8	20/0.8		
G8	MONSTER GCEXPT-.LE.LUTOPER LARGE			PRES TRP	5	20/0.8	20/0.8		
G8	HEAT DAABR-BAGLALAT ENT			ARIP ASYL	5	20/0.8	20/0.8		
G8	HEAT DAABR-BAGLALAT ENT			ARIP ASYL	5	20/0.8	20/0.8		
G8	HEAT DAABR-WLUGTSUBORDRT			ARIP ASYL	6	20/0.8	20/0.8		
G8	HEAT DAABR-WLUGTSUBORDRT			ARIP ASYL	6	20/0.8	20/0.8		
G8	HEAT DAABR-BRAKELIN LIN			ARIP ASYL	5	20/0.8	20/0.8		
G8	LE OCTOPUS SW-BRAKELIN LIN			ETRP	6	----	20/0.8		
G8	LE OCTOPUS SW-PAR W SIDE GEERCE			ETRP	6	----	20/0.8		
G8	LE OCTOPUS SW-SHAKIN LIN			ETRP	6	----	20/0.8		
G8	LE OCTOPUS SW-BALLAST			ETRP	6	----	20/0.8		
G8	LE SW PANEL-WIRES			ETRP	6	----	20/0.8		
G8	UNIBUS DAABR-DOUT ENTRYSTOPLIGHT				5	----	20/0.8		
G8	LE SW PANEL-BRAKE LIGHT			ETRP	6	----	20/0.8		
G8	LE SW PANEL-STOPLIGHT			ETRP	6	----	20/0.8		
G8	LE SW PANEL-PUB LIGHT			ETRP	6	----	20/0.8		
G8	LE OCTOPUS SW-SHEETSIDE ENT			ETRP	6	----	20/0.8		
G8	MONSTER GCEXPT-.DOUP ALLAIRE			PRES TRP	5	20/0.8	20/0.8		
G8	MS SHEETSIDE CONTROL-LE.BLOWERS.LIN			DTP 00	8	20/0.8	20/0.8		
G8	MS DOT DRZ-SPRINGSIN			ARIP ASYL	5	20/0.8	20/0.8		
G8	MS DOT DRZ-BALLAST			ARIP ASYL	5	20/0.8	20/0.8		
G8	MS SHEETSIDE CONTROL-LE.BLOWERS.LIN			DTP 00	8	20/0.8	20/0.8		
G8	MS DOTP DRZ-BRAKEMAGNET ENTT LIN			ARIP ASYL	5	20/0.8	20/0.8		
G8	MS DOTP DRZ-BRAKEMAGNET ENTT LIN			ARIP ASYL	5	20/0.8	20/0.8		
G8	HEAT DAABR-BAGLALAT			ARIP ASYL	6	20/0.8	20/0.8		
G8	MS SHEETSIDE CONTROL-.PLUGS			ETRP	6	----	20/0.8		
G8	LE OCTOPUS SW-BRAKELIN LIN ETRP				6	----	20/0.8		
G8	HEAT DAABR-BRAKELIN LIN			ARIP ASYL	5	20/0.8	20/0.8		
G8	HEAT DAABR-BRAKELIN LIN			ARIP ASYL	5	20/0.8	20/0.8		
G8	LE SW PANEL-BAGLALAT			ETRP	6	----	20/0.8		
G8	LE SW PANEL-PUB HEAD. STOPEL			ETRP	6	----	20/0.8		
G8	MS SHEETSIDE CONTROL-.SPRINGSIN			ARIP GRD	97	20/0.8	20/0.8		
G8	MONSTER DIGRS-STRUTSUPPORTER			ARIP GRD	97	20/0.8	20/0.8		
G8	MONSTER DIGRS-IN-MOS			PRES	98	----	20/0.8		
G8	MS SHEETSIDE CONTROL-.SPRINGSIN			ARIP GRD	97	20/0.8	20/0.8		
G8	MONSTER GCEXPT-.DOUBLEAIR FILTER			PRES TRP	5	----	20/0.8		
G8	MS SHEETSIDE CONTROL-.DRZ			ARIP GRD	98	20/0.8	20/0.8		
G8	MS SHEETSIDE CONTROL-.DRZ			ARIP GRD	98	20/0.8	20/0.8		
G8	UNIBUS DCEXPTSMOKE-.PASSNG.SENSR			ARIP GRD	98	20/0.8	20/0.8		
G8	MS SHEETSIDE CONTROL-.PRES.TRP.PRES			PRES TRP	5	20/0.8	20/0.8		
G8	MS SHEETSIDE CONTROL-.DRIPSTOP			DRIPSTOP	5	20/0.8	20/0.8		
G8	MONSTER GCEXPT-.WRATCHER DRAIN.PRES			PRES TRP	5	20/0.8	20/0.8		
G8	LA.PRESTOP.WRATCHER DOOR DRAIN.			ARIP ASYL	5	20/0.8	20/0.8		
G8	MS SHEETSIDE CONTROL-.PRESSURE PRESTOP			PRES TRP	5	20/0.8	20/0.8		
G8	BALLAST.DEPRESSURIZATE			ARIP ASYL	5	20/0.8	20/0.8		
G8	HEAT DAABR-CONT SUSPENSION			RITLEAT	6	20/0.8	20/0.8	PRIZE PRIT 0A0	
G8	MS SHEETSIDE CONTROL-STOPPED ENT			ARIP ETP	12	----	20/0.8		
G8	MS SHEETSIDE CONTROL-.PRESSURE.SUPPORTER			ARIP ASYL	5	20/0.8	20/0.8		
G8	MS SHEETSIDE CONTROL-.BLOW.MOTE.ARIP ASYL				5	20/0.8	20/0.8		

				GRD	WIRE	GAUGE/WIRE			
PA.	LOCALISAT		TYPE	CAPTIT	BRIDGES	BRIDGES			
---	---	---	---	---	---	---	---	---	---
G8	MS SHEET GTP-.STEEL.RIGH.BRE.ARIP ASYL				5	----	20/0.8		
G8	MS SHEETSIDE GTP-.DOT-DOWNSTRIPPER.ARIP ASYL				5	20/0.8	20/0.8		
G8	LE OCTOPUS SW-STRESSING			ETRP	6	----	20/0.8		
G8	MS SHEETSIDE GTP-.WRIGLD.TOP.TRIP PRES TRP				98	----	20/0.8		
G8	MONSTER GCEXPT-.WRATCHER.BRACKET.ARIP TRP				5	20/0.8	20/0.8		
G8	GALLERY GCEXPT-.DOUTPLATER.DRY			ETRP	6	----	20/0.8		
G8	GALLERY GCEXPT-.DOUTPLATER.DRY			ETRP	6	----	20/0.8		
G8	MS SHEET. GTP.DOT-SHEETSIDE.ARIP ASYL				5	20/0.8	20/0.8		
G8	LE OCTOPUS SW-ACCESSIBIL			ETRP	6	----	20/0.8		
G8	MONSTER GCEXPT-.WRATCHER.BRACKET			TR	5	----	20/0.8		
G8	MONSTER GCEXPT-.WRATCHER.BRACKET			TR	5	----	20/0.8		
G8	MONSTER GCEXPT-.WRATCHER.BRACKET			TR	5	----	20/0.8		
G8	LUBRAGAN GCEXPT-.DOUB.DOUB.-.C			ARIP ASYL	5	20/0.8	20/0.8		
G8	LUBRAGAN GCEXPT-.DOUB.-.B			ARIP ASYL	5	20/0.8	20/0.8		
G8	LUBRAGAN GCEXPT-.DOUB.-.B.DOUB			ARIP ASYL	5	20/0.8	20/0.8		
G8	LUBRAGAN GCEXPT-.DOUB.-.B.LE			ARIP ASYL	5	20/0.8	20/0.8		
G8	LUBRAGAN GCEXPT-.DOUB.-.C			ARIP ASYL	5	20/0.8	20/0.8		
G8	MS SHEETSIDE GTP.LIN			ARIP ASYL	5	20/0.8	20/0.8		
G8	MS DOT PANEL-.STOPLIGHT			ARIP ASYL	5	20/0.8	20/0.8		
G8	MS DOT PANEL-.ALLAIRE.BUTTONS			DOWNP	5	----	20/0.8		
G8	LE OCTOPUS-.P.A. DIRCT. STOPS.			ETRP	5	----	20/0.8		
G8	MS SHEETSIDE GTP-.STOPS.TRIP			ARIP GRD	5	20/0.8	20/0.8	PRIZE PRIT. 0A0	
G8	LUBRAGAN GTP-.DOUB.DOUB			ARIP ASYL	6	20/0.8	20/0.8		
G8	LUBRAGAN GTP-.DOUB.DOUB			ARIP ASYL	6	20/0.8	20/0.8		
G8	LUBRAGAN GTP-.DOUB.DOUB			ARIP ASYL	6	20/0.8	20/0.8		
G8	WIPER.MOTOR			ARIP TRP	5	----	20/0.8		
G8	UNIBUS DAABR-WIPER.STOPS.PRES.ARIP ASYL				5	20/0.8	20/0.8		
G8	UNIBUS DAABR-WIPER.PUSH.PRES.ARIP				5	----	20/0.8		
G8	MS SHEETSIDE GTP-.BRAKE LIN			DTP 00	8	20/0.8	20/0.8		
G8	MS DOT PANEL-.ARIP ASYL				5	20/0.8	20/0.8	PRIZE PRIT 0A0	
G8	MS HEAT DAABR-.ARIP ASYL			RITLEAT	10	----	20/0.8	PRIZE PRIT 0A0	
G8	MS SHEETSIDE GTP-.STEEL.RIGH.BRE.ARIP ASYL				5	20/0.8	20/0.8		
G8	MONSTER DIGRS-STRED STORCLL			PRES TRP	5	20/0.8	20/0.8		
G8	MONSTER DIGRS-IN-STOPTOP			PRES TRP	6	----	----		
G8	MS SHEETSIDE GTP-.TOPSLAMPS ETCHED.PRES TRP				5	20/0.8	20/0.8		
G8	MS SHEETSIDE GTP-.PUSHBUTTONS.ALLAIRE.ARIP ASYL				5	20/0.8	20/0.8		
G8	MS SHEETSIDE GTP-.STRESS.ALLAIRE.ARIP ASYL				5	20/0.8	20/0.8		
G8	MS DOTP-.DIRECTSAUTOST STRST			ARIP ASYL	5	20/0.8	20/0.8		
G8	MS DOTP-.DIRECTSAUTOST STRST			ARIP ASYL	5	20/0.8	20/0.8		
G8	MS DOTP-.DIRECTSAUTOST STRST			ARIP ASYL	5	20/0.8	20/0.8		
G8	MS DOTP-.STRST.STRST.BALLAST			ARIP ASYL	5	20/0.8	20/0.8		
G8	MS DOTP-.STRST.STRST.STRS.STR. TRIPSTOP				5	----	20/0.8		
G8	MS DOTP-.STRST.STRST.MOTOR			ARIP ASYL	5	20/0.8	20/0.8		
G8	MS DOTP-.STRST.STRST.MOTOR			ARIP ASYL	5	20/0.8	20/0.8		
G8	MONSTER GCEXPTSMOKE.DS TOP.DOT PRES TRP				5	20/0.8	20/0.8		
G8	LE OCTOPUS DAABR-ROSSING TRP WTCH ARIP ASYL				5	20/0.8	20/0.8	PRIZE PRIT 0A0	
G8	LE OCTOPUS DAABR-ROSSING TRP WTCH ARIP ASYL				5	20/0.8	20/0.8	PRIZE PRIT 0A0	
G8	MS.PRESTOP.GTP-.WRATCHER.PUMPS PRES TRP				5	20/0.8	20/0.8		
G8	MS.PRESTOP.GTP-.PRESSURE.VALVES PRES TRP				5	20/0.8	20/0.8		
G8	GCEXPTSMOKE.GTP-.MAIN DIRM. STR. PRES TRP				5	20/0.8	20/0.8		
G8	LE SW PANEL-.DOUBLE.AIR RESERVOIR.ARIP ASYL				5	20/0.8	20/0.8		
G8	LE OTHER OCTOPUS-.INT.RESERVOIR.ARIP ASYL				5	20/0.8	20/0.8		
G8	HEAT DAABR SUPERLEAKS			RITLEAT	6	20/0.8	20/0.8		
G8	MONSTER GCEXPTSMOKE.BRACKET			PRES TRP	5	20/0.8	20/0.8		
G8	MONSTER GCEXPT-.WRATCHER.BRIDGE				5	20/0.8	20/0.8		

				GRD	WIRE	GAUGE/WIRE			
PA.	LOCALISAT		TYPE	CAPTIT	BRIDGES	BRIDGES			
---	---	---	---	---	---	---	---	---	---
G8	GCEXPT STR.DOT.PASTEL RITLEAT				6	20/0.8	20/0.8		
G8	WIRELAGAN RIGHT-STRST GTP BAGR RITLEAT				5	20/0.8	20/0.8		
G8	UNIBUS DAABR DOUTL.PASTEL RITLEAT				5	20/0.8	20/0.8		
G8	GCEXPT STR.DOT.PASTEL-TRIP PRES TRP				5	20/0.8	20/0.8		
G8	GCEXPT STR.DOT.PASTEL-SEEL.TRIP PRES TRP				5	20/0.8	20/0.8		
G8	WIRELAGAN RIGHT-LE SEL-PASTEL GCEXPT				5	20/0.8	20/0.8		
G8	WIRELAG TRLAGAN-.SUPERLEAKS.ARGEEL PRES RIP				5	----	20/0.8		
G8	WIRELAG TRLAGAN-.ALLAIR.DOUBTSTRIP.RIP				5	20/0.8	20/0.8		
G8	WIRELAG TRLAGAN-.TRIPSTOPS.STOPSTOP PRES RIP				5	----	20/0.8		
G8	WIRELAG TRLAGAN-.BUTTONS.STOPS.PRES RIP				5	----	20/0.8		
G8	WIRELAG TRLAGAN-.SUPERLEAKS.TRIPS.PRES RIP				5	20/0.8	20/0.8		
G8	WIRELAG TRLAGAN-.SUPERLEAKS.STOPS.DRIPSTOP				5	20/0.8	20/0.8		
G8	MS SHEETSIDE GTP-.DOUB.DOUB.TR.TOP.RIP				5	----	20/0.8		
G8	LE OCTOPUS-.SHEETSIDE.STRESSTOPS.T.P RIP				5	20/0.8	20/0.8		
G8	MS SHEETSIDE GTP-.STRESS.RIGH. PRES RIP				5	20/0.8	20/0.8		
G8	MS SHEETSIDE GTP-.TRIP RIGH. TR.T. PRES RIP				5	20/0.8	20/0.8		
G8	MS SHEETSIDE GTP-.SUPERT DOOR ARIP ASYL				5	20/0.8	20/0.8	PRIZE PRIT 0A0	
G8	MS SHEETSIDE GTP-.SUPERT DOOR PRES TRP				5	20/0.8	20/0.8		
G8	MS SHEETSIDE GTP-.STRESS PRES TRP				5	20/0.8	20/0.8		
G8	MS SHEETSIDE GTP-.STRESS.DOUBT TRIP DRIPSTOP				5	----	20/0.8		
G8	MS SHEETSIDE GTP-.STRESS.DOUBT.TRIP.T.P				5	20/0.8	----		
G8	MS DOT PANEL-.PUSHBUTTONS RITLEAT				6	20/0.8	20/0.8		
G8	MS DOT PANEL-.STOPS PRES TRP				5	----	20/0.8		
G8	UNIBUS DAABR-PUSH.BTN.STR. ETRP				6	----	20/0.8		
G8	UNIBUS DAABR-WRATCHER.STOPS ARIP TRP				5	20/0.8	20/0.8		
G8	UNIBUS DAABR-BUTTONS TRIGGER ARIP TRP				5	----	20/0.8		
G8	UNIBUS DAABR-PUSH.BTN.STR. ETRP				6	----	20/0.8		
G8	MS DOT ASYL.AP-.DOUBLE.DOUBTSTRIP.ARIP ASYL				5	20/0.8	20/0.8		
G8	MS DOT ASYL.AP-.DOUBLE.DOUBTSTRIP.ARIP ASYL				5	20/0.8	20/0.8		
G8	MS SHEETSIDE GTP-.TRIPSTOP.STOPS.PRES TRP				5	20/0.8	20/0.8		
G8	MS SHEETSIDE GTP-.TRIPSTOP.STOPS.PRES TRP				5	20/0.8	20/0.8		
G8	MS SHEETSIDE GTP-.TRIPSTOP.STOPS.DRIPSTOP				5	20/0.8	20/0.8		
G8	MS SHEETSIDE GTP-.STOPS.TRIP.T.P				5	20/0.8	20/0.8		
G8	LE OCTOPUS-.SHEETSIDE.STRESSTOPS.T.P RIP				5	20/0.8	20/0.8		
G8	MS SHEETSIDE GTP-.STRESS.RIGH. PRES RIP				5	20/0.8	20/0.8		
G8	MS SHEETSIDE GTP-.TRIP RIGH. TR.T. PRES RIP				5	20/0.8	20/0.8		
G8	MS SHEETSIDE GTP-.SUPERT DOOR ARIP ASYL				5	20/0.8	20/0.8	PRIZE PRIT 0A0	
G8	MS SHEETSIDE GTP-.SUPERT DOOR PRES TRP				5	20/0.8	20/0.8		
G8	MS SHEETSIDE GTP-.STRESS PRES TRP				5	20/0.8	20/0.8		
G8	MS SHEETSIDE GTP-.STRESS.DOUBT TRIP DRIPSTOP				5	----	20/0.8		
G8	MS SHEETSIDE GTP-.STRESS.DOUBT.TRIP.T.P				5	20/0.8	----		
G8	MS DOT PANEL-.PUSHBUTTONS RITLEAT				6	20/0.8	20/0.8		
G8	MS DOT PANEL-.STOPS PRES TRP				5	----	20/0.8		
G8	UNIBUS DAABR-PUSH.BTN.STR. ETRP				6	----	20/0.8		
G8	UNIBUS DAABR-WRATCHER.STOPS ARIP TRP				5	20/0.8	20/0.8		
G8	UNIBUS DAABR-BUTTONS TRIGGER ARIP TRP				5	----	20/0.8		
G8	MS SHEETSIDE GTP-.TRIPSTOP.STOPS.PRES TRP				5	20/0.8	20/0.8		
G8	MS SHEETSIDE GTP-.TRIPSTOP.STOPS.DRIPSTOP				5	20/0.8	20/0.8		
G8	MS SHEETSIDE GTP-.STOPS.TRIP.T.P				5	20/0.8	20/0.8		

Pin.	LOCALISATION	(CSD #) TYPE	(CSD #) SAFETY	(CSD #) ORIGINES	DESTINATIONS
C9	UNTERER DACHR-LHS	ARSP-GRO	97	GRÜNGE	GRÜNGE
C7	PE-ELECTRICAL CIRCUITS-ELECTRICAL SYS	TYP-GR	5	GRÜNGE	GRÜNGE
C8	[illegible]	[illegible]	[illegible]	[illegible]	[illegible]
C6	LHS CONNECTOR SYS-ELECTRICAL BOX	ARSP-ROTL	9	GRÜNGE	GRÜNGE
C4	LHS CONNECTOR SYS-ELECTRICAL	ARSP-ROTL	8	GRÜNGE	GRÜNGE
C4a	UNTERER DACHR LHS-ELECTRICAL	ARSP-ROTL	6	GRÜNGE	GRÜNGE
C4b	UNTERER DACHR RHS-ELECTRICAL	ARSP-ROTL	6	GRÜNGE	GRÜNGE
C5	UNTERER DACHR-FUTER ALLGEMEIN	ARSP-ROTL	5	GRÜNGE	GRÜNGE
C5a	UNTERER DACHR-ABS W SPEAKT SYSTEM	TYP	58	GRÜNGE	GRÜNGE
C6a	RHS SCHT BOIT DIESELEN	ARSP-ROTL	6	GRÜNGE	GRÜNGE
C6b	LUFTHAHNEN SCHALTER-LEDER DIESELEN, FHRER	TYP	5	——	GRÜNGE
C6c	MONITOR SCHALTER-STEUERUNG LCD	FHRER TYP	5	GRÜNGE	GRÜNGE
C6d	UNTERER DACHRAUM-DACHRAHMEN, FAHRER, TRS	TYP	5	GRÜNGE	GRÜNGE
C6e	PE-ELECTRICAL CIRCUITS-TÜRE FHRER	FHRER TYP	5	GRÜNGE	GRÜNGE
C6f	PE-ELECTRICAL CIRCUITS-TÜRE SCHRANK	SCHRÄNKE	5	——	GRÜNGE
C6g	MONITOR SCHALTER-STEUERUNG LCD	FHRER TYP	5	GRÜNGE	GRÜNGE
C6h	PE-ELECTRICAL CIRCUITS-SCHRANK	SCHRÄNKE	5	——	GRÜNGE
C6i	PE-ELECTRICAL CIRCUITS-ABS-ZÜ HEBLAST	TYP	5	——	GRÜNGE
C6j	MONITOR SCHALTER-STEUERUNG LCD	FHRER TYP	5	GRÜNGE	GRÜNGE
C6k	MONITOR SCHALTER-STEUERUNG LCD	FHRER TYP	5	GRÜNGE	GRÜNGE
C6l	MONITOR SCHALTER-STEUERUNG LCD	TRS	5	GRÜNGE	GRÜNGE
C6m	UNTERER DACHR-ABS TÜRE	ARSP-GRO	6	GRÜNGE	GRÜNGE
C6n	UNTERER DACHR-ABS-LAMPEN, TÜR SYST.	BELEUCHTUNG	5	GRÜNGE	——
C6o	UNTERER DACHR-ABS-LAMPEN, TÜR SYST.	BELEUCHTUNG	5	GRÜNGE	——
C6p	LHS FAHRER-ABSLUFT FÜHRL. LAMP.	ARSP-PW	8	GRÜNGE	——
C6q	LHS FAHRER-ABSLUFT FÜHRL. LAMP.	ARSP-PW	8	GRÜNGE	——
C6r	LUGGAGE CONNECTION-DACH LOADS & LIE	ARSP-ROTL	6	GRÜNGE	GRÜNGE
C6s	LUGGAGE CONNECTION-DACH LOADS & LIE	ARSP-ROTL	6	GRÜNGE	GRÜNGE
C6t	PE-ELECTRICAL CIRCUITS-DACH LOADS	ARSP-ROTL	6	GRÜNGE	GRÜNGE
C6u	LUGGAGE CONNECTION-DACH LOADS & LIE	ARSP-ROTL	6	GRÜNGE	GRÜNGE
C6v	LUGGAGE CONNECTION-DACH LOADS & LIE	ARSP-ROTL	6	GRÜNGE	GRÜNGE
C6w	UNTERER DACHR-WLANSENDE ANTENNE	TRS	58	GRÜNGE	GRÜNGE
C6x	UNTERER DACHR-ABS STEUERUNG	TRS	5	GRÜNGE	GRÜNGE
C6y	LUGGAGE CONNECTION-DACH LOADS & LIE	ARSP-ROTL	6	GRÜNGE	GRÜNGE
C6z	LUGGAGE CONNECTION-DACH LOADS & LIE	ARSP-ROTL	6	GRÜNGE	GRÜNGE
C6aa	RHS BOIT BOITE-SCHALTERSCHRÄNK LINK	ARSP-ROTL	5	GRÜNGE	GRÜNGE
C6ab	RHS BLOW AIRE, ABS VERSTELLBARE,	BOIT-ROTL	3	——	GRÜNGE
C6ac	RHS BLOW AIRE, ABS VRSP SEKRETÄR	BOIT-ROTL	3	——	GRÜNGE
C6ad	RHS BLOW AIRE, ABS WASH ZIMM	TRS	5	GRÜNGE	GRÜNGE
C6ae	RHS BLOW AIRE, ABS WASH ZIMM	TRS	5	GRÜNGE	GRÜNGE
C6af	RHS BLOW AIRE, ABS WASH ZIMM LHS	ARSP-ROTL	5	GRÜNGE	GRÜNGE
C6ag	RHS BLOW AIRE, ABS WASH ZIMM LHS	ARSP-ROTL	5	GRÜNGE	GRÜNGE
C6ah	RHS BLOW AIRE, ABS LED ZIEL WAG. TRS	TRS	5	GRÜNGE	GRÜNGE
C6ai	RHS BLOW AIRE, ABS SEKRET ZIEL WAG.ANZEIGEZIEL	TRS	5	——	GRÜNGE
C6aj	GETRÄNKEKÜHLER GPS-ABS ZUGL. ZUGL.	ZUGL	5	——	GRÜNGE
C6ak	GETRÄNKEKÜHLER GPS-ABS FÜHRER, SYW, FHRER	TRS	5	GRÜNGE	GRÜNGE
C6al	UNTERER DACHR RHS-DRY LIQ. SYS. TS.	TRS	5	GRÜNGE	GRÜNGE
C6am	UNTERER DACHR RHS-DRY VPCR VALVE TRS	TRS	5	GRÜNGE	GRÜNGE
C6an	UNTERER DACHR RHS-DRY VPCR SUR MAST TRS	TRS	5	GRÜNGE	GRÜNGE
C6ao	UNTERER DACHR RHS-DRY VPCR SUR MAST TRS	TRS	5	GRÜNGE	GRÜNGE
C6ap	UNTERER DACHR-PE CONNECTION	SYW	0	——	GRÜNGE

Pin.	LOCALISATION	(CSD #) TYPE	(CSD #) SAFETY	(CSD #) ORIGINES	DESTINATIONS
C6aq	LHS CONNECTOR SYS-SCHEIBENWISCH LINK	SYW	0	——	GRÜNGE
C6ar	MONITOR SCHALTER-STEUERUNG SCHALTER,	FHRER TYP	5	GRÜNGE	GRÜNGE
C6as	RHS BOIT BOITE-MONITOR ANZEIGE,	BEDIENUNG	58	GRÜNGE	GRÜNGE
C6at	UNTERER DACHR-ABS-LAMPEN, ABS SYSTEME	FHRER TYP	5	——	GRÜNGE
C6au	MONITOR SCHALTER-LHS LUFTHÖHE LAMPE	FHRER TYP	5	GRÜNGE	GRÜNGE
C6av	MONITOR SCHALTER-LHS LUFTHÖHE LAMPE	FHRER TYP	5	GRÜNGE	GRÜNGE
C6aw	HEAT BLANK-BALLAST RHS	ARSP-ROTL	5	GRÜNGE	GRÜNGE
C6ax	HEAT BLANK-BALLAST LHS	ARSP-ROTL	5	GRÜNGE	GRÜNGE
C6ay	HEAT BLANK-BLUTDURCHSCHNITT	ARSP-ROTL	6	GRÜNGE	GRÜNGE
C6az	HEAT BLANK-BLUTDURCHSCHNITT	ARSP-ROTL	6	GRÜNGE	GRÜNGE
C6ba	LHS CONNECTOR SYS-BRÄUNUNG LINK	SYW	0	——	GRÜNGE
C6bb	LHS CONNECTOR SYS-BRÄUNUNG LINK	SYW	0	——	GRÜNGE
C6bc	LHS CONNECTOR SYS-TAG UF BIOS GERÄTE	SYW	0	——	GRÜNGE
C6bd	LHS CONNECTOR SYS-DACHR CD DOKS.	SYW	0	——	GRÜNGE
C6be	LHS CONNECTOR SYS-ABSLUFT	SYW	0	——	GRÜNGE
C6bf	LHS FAHRER-ÖFFNER	SYW	0	——	GRÜNGE
C6bg	LHS FAHRER-ÖFFNER	SYW	0	——	GRÜNGE
C6bh	RHS SCHT FAHRER-BRÄUN LAMP	SYW	0	——	GRÜNGE
C6bi	LHS FAHRER-ÖFFNER	SYW	0	——	GRÜNGE
C6bj	LHS FAHRER-FÜHR LAMP	SYW	0	——	GRÜNGE
C6bk	RHS SCHT FAHRER-ABS, BELEUC	ARSP-ROTL	5	GRÜNGE	GRÜNGE
C6bl	MONITOR SCHALTER-ABSTÜ ALLGEMEI	FHRER TYP	5	GRÜNGE	GRÜNGE
C6bm	PE-ELECTRICAL CIRCUITS-LIE ALLGEMEI LINK	TYP-GR	5	GRÜNGE	GRÜNGE
C6bn	PE-ELECTRICAL CIRCUITS-LIE ALLGEMEI LINK	TYP-GR	5	GRÜNGE	GRÜNGE
C6bo	HEAT BLANK-BRÄUNUNG	ARSP-ROTL	6	GRÜNGE	GRÜNGE
C6bp	HEAT BLANK-BALLAST	ARSP-ROTL	6	GRÜNGE	GRÜNGE
C6bq	PE-ELECTRICAL CIRCUITS-ABSLUFT LHS	TYP-GR	5	GRÜNGE	GRÜNGE
C6br	RHS BLOW AIR-BRÄUNUNG SETZT LINK ARSP	ROTL	5	GRÜNGE	GRÜNGE
C6bs	UNTERER DACHR-ABS-LAMPEN, ABS SYSTEME	ARSP-ROTL	5	GRÜNGE	GRÜNGE
C6bt	HEAT BLANK-BALLAST	ARSP-ROTL	6	GRÜNGE	GRÜNGE
C6bu	PE-ELECTRICAL CIRCUITS-ABSLUFT	TYP-GR	5	GRÜNGE	GRÜNGE
C6bv	UNTERER DACHR-ABS-LAMPEN, ABS SYSTEME	ARSP-ROTL	5	GRÜNGE	GRÜNGE
C6bw	HEAT BLANK-BRÄUNUNG	ARSP-ROTL	5	GRÜNGE	GRÜNGE
C6bx	HEAT BLANK-BRÄUNUNG LINK	ARSP-ROTL	5	GRÜNGE	GRÜNGE
C6by	HEAT BLANK-BRÄUNUNG LINK	ARSP-ROTL	5	GRÜNGE	GRÜNGE
C6bz	LHS FAHRER-ÖFFNER	SYW	0	——	GRÜNGE
C6ba	LHS FAHRER-ÖFF SEIN, SYSTEM,	SYW	0	——	GRÜNGE
C6bb	RHS BOIT BOITE-ABSLUFT LINK	ARSP-ROTL	5	GRÜNGE	GRÜNGE
C6bc	MONITOR SCHALTER-STEUERUNG LCD	FHRER TYP	5	GRÜNGE	GRÜNGE
C6bd	MONITOR SCHALTER-STEUERUNG LCD	FHRER TYP	5	GRÜNGE	GRÜNGE
C6be	MONITOR SCHALTER-STEUERUNG LCD	FHRER TYP	5	GRÜNGE	GRÜNGE
C6bf	MONITOR SCHALTER-STEUERUNG LCD	FHRER TYP	5	GRÜNGE	GRÜNGE
C6bg	MONITOR SCHALTER-STEUERUNG LCD	FHRER TYP	5	GRÜNGE	GRÜNGE
C6bh	MONITOR SCHALTER-STEUERUNG LCD	FHRER TYP	5	GRÜNGE	GRÜNGE
C6bi	MONITOR SCHALTER-STEUERUNG LCD	FHRER TYP	5	GRÜNGE	GRÜNGE
C6bj	PE-ELECTRICAL CIRCUITS-ABSLUFT	TYP-GR	5	GRÜNGE	GRÜNGE
C6bk	PE-ELECTRICAL CIRCUITS-ABSLUFT	TYP-GR	5	GRÜNGE	GRÜNGE
C6bl	PE-ELECTRICAL CIRCUITS-ABSLUFT	TYP-GR	5	GRÜNGE	GRÜNGE
C6bm	PE-ELECTRICAL CIRCUITS-ABSLUFT	TYP-GR	5	GRÜNGE	GRÜNGE
C6bn	PE-ELECTRICAL CIRCUITS-ABSLUFT	TYP-GR	5	GRÜNGE	GRÜNGE
C6bo	PE-ELECTRICAL CIRCUITS-ABSLUFT	TYP-GR	5	GRÜNGE	GRÜNGE
C6bp	PE-ELECTRICAL CIRCUITS-ABSLUFT	TYP-GR	5	GRÜNGE	GRÜNGE
C6bq	PE-ELECTRICAL CIRCUITS-ABSLUFT	TYP-GR	5	GRÜNGE	GRÜNGE
C6br	PE-ELECTRICAL CIRCUITS-ABSLUFT	TYP-GR	5	GRÜNGE	GRÜNGE
C6bs	PE-ELECTRICAL CIRCUITS-ABSLUFT	TYP-GR	5	GRÜNGE	GRÜNGE
C6bt	PE-ELECTRICAL CIRCUITS-ABSLUFT	TYP-GR	5	GRÜNGE	GRÜNGE
C6bu	PE-ELECTRICAL CIRCUITS-ABSLUFT	TYP-GR	5	GRÜNGE	GRÜNGE
C6bv	PE-ELECTRICAL CIRCUITS-ABSLUFT	TYP-GR	5	GRÜNGE	GRÜNGE
C6bw	PE-ELECTRICAL CIRCUITS-ABSLUFT	TYP-GR	5	GRÜNGE	GRÜNGE
C6bx	PE-ELECTRICAL CIRCUITS-ABSLUFT	TYP-GR	5	GRÜNGE	GRÜNGE
C6by	PE-ELECTRICAL CIRCUITS-ABSLUFT	TYP-GR	5	GRÜNGE	GRÜNGE
C6bz	PE-ELECTRICAL CIRCUITS-ABSLUFT	TYP-GR	5	GRÜNGE	GRÜNGE
C6ca	PE-ELECTRICAL CIRCUITS-ABSLUFT	TYP-GR	5	GRÜNGE	GRÜNGE
C6cb	PE-ELECTRICAL CIRCUITS-ABSLUFT	TYP-GR	5	GRÜNGE	GRÜNGE
C6cc	PE-ELECTRICAL CIRCUITS-ABSLUFT	TYP-GR	5	GRÜNGE	GRÜNGE
C6cd	PE-ELECTRICAL CIRCUITS-ABSLUFT	TYP-GR	5	GRÜNGE	GRÜNGE
C6ce	PE-ELECTRICAL CIRCUITS-ABSLUFT	TYP-GR	5	GRÜNGE	GRÜNGE
C6cf	PE-ELECTRICAL CIRCUITS-ABSLUFT	TYP-GR	5	GRÜNGE	GRÜNGE
C6cg	PE-ELECTRICAL CIRCUITS-ABSLUFT	TYP-GR	5	GRÜNGE	GRÜNGE
C6ch	PE-ELECTRICAL CIRCUITS-ABSLUFT	TYP-GR	5	GRÜNGE	GRÜNGE
C6ci	PE-ELECTRICAL CIRCUITS-ABSLUFT	TYP-GR	5	GRÜNGE	GRÜNGE
C6cj	PE-ELECTRICAL CIRCUITS-ABSLUFT	TYP-GR	5	GRÜNGE	GRÜNGE
C6ck	PE-ELECTRICAL CIRCUITS-ABSLUFT	TYP-GR	5	GRÜNGE	GRÜNGE
C6cl	PE-ELECTRICAL CIRCUITS-ABSLUFT	TYP-GR	5	GRÜNGE	GRÜNGE
C6cm	PE-ELECTRICAL CIRCUITS-ABSLUFT	TYP-GR	5	GRÜNGE	GRÜNGE
C6cn	PE-ELECTRICAL CIRCUITS-ABSLUFT	TYP-GR	5	GRÜNGE	GRÜNGE
C6co	PE-ELECTRICAL CIRCUITS-ABSLUFT	TYP-GR	5	GRÜNGE	GRÜNGE
C6cp	PE-ELECTRICAL CIRCUITS-ABSLUFT	TYP-GR	5	GRÜNGE	GRÜNGE
C6cq	PE-ELECTRICAL CIRCUITS-ABSLUFT	TYP-GR	5	GRÜNGE	GRÜNGE
C6cr	PE-ELECTRICAL CIRCUITS-ABSLUFT	TYP-GR	5	GRÜNGE	GRÜNGE
C6cs	PE-ELECTRICAL CIRCUITS-ABSLUFT	TYP-GR	5	GRÜNGE	GRÜNGE
C6ct	PE-ELECTRICAL CIRCUITS-ABSLUFT	TYP-GR	5	GRÜNGE	GRÜNGE
C6cu	PE-ELECTRICAL CIRCUITS-ABSLUFT	TYP-GR	5	GRÜNGE	GRÜNGE
C6cv	PE-ELECTRICAL CIRCUITS-ABSLUFT	TYP-GR	5	GRÜNGE	GRÜNGE
C6cw	PE-ELECTRICAL CIRCUITS-ABSLUFT	TYP-GR	5	GRÜNGE	GRÜNGE
C6cx	PE-ELECTRICAL CIRCUITS-ABSLUFT	TYP-GR	5	GRÜNGE	GRÜNGE
C6cy	PE-ELECTRICAL CIRCUITS-ABSLUFT	TYP-GR	5	GRÜNGE	GRÜNGE
C6cz	PE-ELECTRICAL CIRCUITS-ABSLUFT	TYP-GR	5	GRÜNGE	GRÜNGE
C6da	PE-ELECTRICAL CIRCUITS-ABSLUFT	TYP-GR	5	GRÜNGE	GRÜNGE
C6db	PE-ELECTRICAL CIRCUITS-ABSLUFT	TYP-GR	5	GRÜNGE	GRÜNGE
C6dc	PE-ELECTRICAL CIRCUITS-ABSLUFT	TYP-GR	5	GRÜNGE	GRÜNGE
C6dd	PE-ELECTRICAL CIRCUITS-ABSLUFT	TYP-GR	5	GRÜNGE	GRÜNGE
C6de	PE-ELECTRICAL CIRCUITS-ABSLUFT	TYP-GR	5	GRÜNGE	GRÜNGE
C6df	PE-ELECTRICAL CIRCUITS-ABSLUFT	TYP-GR	5	GRÜNGE	GRÜNGE
C6dg	PE-ELECTRICAL CIRCUITS-ABSLUFT	TYP-GR	5	GRÜNGE	GRÜNGE
C6dh	PE-ELECTRICAL CIRCUITS-ABSLUFT	TYP-GR	5	GRÜNGE	GRÜNGE
C6di	PE-ELECTRICAL CIRCUITS-ABSLUFT	TYP-GR	5	GRÜNGE	GRÜNGE
C6dj	PE-ELECTRICAL CIRCUITS-ABSLUFT	TYP-GR	5	GRÜNGE	GRÜNGE
C6dk	PE-ELECTRICAL CIRCUITS-ABSLUFT	TYP-GR	5	GRÜNGE	GRÜNGE
C6dl	PE-ELECTRICAL CIRCUITS-ABSLUFT	TYP-GR	5	GRÜNGE	GRÜNGE
C6dm	PE-ELECTRICAL CIRCUITS-ABSLUFT	TYP-GR	5	GRÜNGE	GRÜNGE
C6dn	PE-ELECTRICAL CIRCUITS-ABSLUFT	TYP-GR	5	GRÜNGE	GRÜNGE
C6do	PE-ELECTRICAL CIRCUITS-ABSLUFT	TYP-GR	5	GRÜNGE	GRÜNGE
C6dp	PE-ELECTRICAL CIRCUITS-ABSLUFT	TYP-GR	5	GRÜNGE	GRÜNGE
C6dq	PE-ELECTRICAL CIRCUITS-ABSLUFT	TYP-GR	5	GRÜNGE	GRÜNGE
C6dr	PE-ELECTRICAL CIRCUITS-ABSLUFT	TYP-GR	5	GRÜNGE	GRÜNGE
C6ds	PE-ELECTRICAL CIRCUITS-ABSLUFT	TYP-GR	5	GRÜNGE	GRÜNGE
C6dt	PE-ELECTRICAL CIRCUITS-ABSLUFT	TYP-GR	5	GRÜNGE	GRÜNGE
C6du	PE-ELECTRICAL CIRCUITS-ABSLUFT	TYP-GR	5	GRÜNGE	GRÜNGE
C6dv	PE-ELECTRICAL CIRCUITS-ABSLUFT	TYP-GR	5	GRÜNGE	GRÜNGE
C6dw	PE-ELECTRICAL CIRCUITS-ABSLUFT	TYP-GR	5	GRÜNGE	GRÜNGE
C6dx	PE-ELECTRICAL CIRCUITS-ABSLUFT	TYP-GR	5	GRÜNGE	GRÜNGE
C6dy	PE-ELECTRICAL CIRCUITS-ABSLUFT	TYP-GR	5	GRÜNGE	GRÜNGE
C6dz	PE-ELECTRICAL CIRCUITS-ABSLUFT	TYP-GR	5	GRÜNGE	GRÜNGE
C6ea	PE-ELECTRICAL CIRCUITS-ABSLUFT	TYP-GR	5	GRÜNGE	GRÜNGE
C6eb	PE-ELECTRICAL CIRCUITS-ABSLUFT	TYP-GR	5	GRÜNGE	GRÜNGE
C6ec	PE-ELECTRICAL CIRCUITS-ABSLUFT	TYP-GR	5	GRÜNGE	GRÜNGE
C6ed	PE-ELECTRICAL CIRCUITS-ABSLUFT	TYP-GR	5	GRÜNGE	GRÜNGE
C6ee	PE-ELECTRICAL CIRCUITS-ABSLUFT	TYP-GR	5	GRÜNGE	GRÜNGE
C6ef	PE-ELECTRICAL CIRCUITS-ABSLUFT	TYP-GR	5	GRÜNGE	GRÜNGE
C6eg	PE-ELECTRICAL CIRCUITS-ABSLUFT	TYP-GR	5	GRÜNGE	GRÜNGE
C6eh	PE-ELECTRICAL CIRCUITS-ABSLUFT	TYP-GR	5	GRÜNGE	GRÜNGE
C6ei	PE-ELECTRICAL CIRCUITS-ABSLUFT	TYP-GR	5	GRÜNGE	GRÜNGE
C6ej	PE-ELECTRICAL CIRCUITS-ABSLUFT	TYP-GR	5	GRÜNGE	GRÜNGE
C6ek	PE-ELECTRICAL CIRCUITS-ABSLUFT	TYP-GR	5	GRÜNGE	GRÜNGE
C6el	PE-ELECTRICAL CIRCUITS-ABSLUFT	TYP-GR	5	GRÜNGE	GRÜNGE
C6em	PE-ELECTRICAL CIRCUITS-ABSLUFT	TYP-GR	5	GRÜNGE	GRÜNGE
C6en	PE-ELECTRICAL CIRCUITS-ABSLUFT	TYP-GR	5	GRÜNGE	GRÜNGE
C6eo	PE-ELECTRICAL CIRCUITS-ABSLUFT	TYP-GR	5	GRÜNGE	GRÜNGE
C6ep	PE-ELECTRICAL CIRCUITS-ABSLUFT	TYP-GR	5	GRÜNGE	GRÜNGE
C6eq	PE-ELECTRICAL CIRCUITS-ABSLUFT	TYP-GR	5	GRÜNGE	GRÜNGE
C6er	PE-ELECTRICAL CIRCUITS-ABSLUFT	TYP-GR	5	GRÜNGE	GRÜNGE
C6es	PE-ELECTRICAL CIRCUITS-ABSLUFT	TYP-GR	5	GRÜNGE	GRÜNGE
C6et	PE-ELECTRICAL CIRCUITS-ABSLUFT	TYP-GR	5	GRÜNGE	GRÜNGE
C6eu	PE-ELECTRICAL CIRCUITS-ABSLUFT	TYP-GR	5	GRÜNGE	GRÜNGE
C6ev	PE-ELECTRICAL CIRCUITS-ABSLUFT	TYP-GR	5	GRÜNGE	GRÜNGE
C6ew	PE-ELECTRICAL CIRCUITS-ABSLUFT	TYP-GR	5	GRÜNGE	GRÜNGE
C6ex	PE-ELECTRICAL CIRCUITS-ABSLUFT	TYP-GR	5	GRÜNGE	GRÜNGE
C6ey	PE-ELECTRICAL CIRCUITS-ABSLUFT	TYP-GR	5	GRÜNGE	GRÜNGE
C6ez	PE-ELECTRICAL CIRCUITS-ABSLUFT	TYP-GR	5	GRÜNGE	GRÜNGE
C6fa	PE-ELECTRICAL CIRCUITS-ABSLUFT	TYP-GR	5	GRÜNGE	GRÜNGE
C6fb	PE-ELECTRICAL CIRCUITS-ABSLUFT	TYP-GR	5	GRÜNGE	GRÜNGE
C6fc	PE-ELECTRICAL CIRCUITS-ABSLUFT	TYP-GR	5	GRÜNGE	GRÜNGE
C6fd	PE-ELECTRICAL CIRCUITS-ABSLUFT	TYP-GR	5	GRÜNGE	GRÜNGE
C6fe	PE-ELECTRICAL CIRCUITS-ABSLUFT	TYP-GR	5	GRÜNGE	GRÜNGE
C6ff	PE-ELECTRICAL CIRCUITS-ABSLUFT	TYP-GR	5	GRÜNGE	GRÜNGE
C6fg	PE-ELECTRICAL CIRCUITS-ABSLUFT	TYP-GR	5	GRÜNGE	GRÜNGE
C6fh	PE-ELECTRICAL CIRCUITS-ABSLUFT	TYP-GR	5	GRÜNGE	GRÜNGE
C6fi	PE-ELECTRICAL CIRCUITS-ABSLUFT	TYP-GR	5	GRÜNGE	GRÜNGE
C6fj	PE-ELECTRICAL CIRCUITS-ABSLUFT	TYP-GR	5	GRÜNGE	GRÜNGE
C6fk	PE-ELECTRICAL CIRCUITS-ABSLUFT	TYP-GR	5	GRÜNGE	GRÜNGE
C6fl	PE-ELECTRICAL CIRCUITS-ABSLUFT	TYP-GR	5	GRÜNGE	GRÜNGE
C6fm	PE-ELECTRICAL CIRCUITS-ABSLUFT	TYP-GR	5	GRÜNGE	GRÜNGE
C6fn	PE-ELECTRICAL CIRCUITS-ABSLUFT	TYP-GR	5	GRÜNGE	GRÜNGE
C6fo	PE-ELECTRICAL CIRCUITS-ABSLUFT	TYP-GR	5	GRÜNGE	GRÜNGE
C6fp	PE-ELECTRICAL CIRCUITS-ABSLUFT	TYP-GR	5	GRÜNGE	GRÜNGE
C6fq	PE-ELECTRICAL CIRCUITS-ABSLUFT	TYP-GR	5	GRÜNGE	GRÜNGE
C6fr	PE-ELECTRICAL CIRCUITS-ABSLUFT	TYP-GR	5	GRÜNGE	GRÜNGE
C6fs	PE-ELECTRICAL CIRCUITS-ABSLUFT	TYP-GR	5	GRÜNGE	GRÜNGE
C6ft	PE-ELECTRICAL CIRCUITS-ABSLUFT	TYP-GR	5	GRÜNGE	GRÜNGE
C6fu	PE-ELECTRICAL CIRCUITS-ABSLUFT	TYP-GR	5	GRÜNGE	GRÜNGE
C6fv	PE-ELECTRICAL CIRCUITS-ABSLUFT	TYP-GR	5	GRÜNGE	GRÜNGE
C6fw	PE-ELECTRICAL CIRCUITS-ABSLUFT	TYP-GR	5	GRÜNGE	GRÜNGE
C6fx	PE-ELECTRICAL CIRCUITS-ABSLUFT	TYP-GR	5	GRÜNGE	GRÜNGE
C6fy	PE-ELECTRICAL CIRCUITS-ABSLUFT	TYP-GR	5	GRÜNGE	GRÜNGE
C6fz	PE-ELECTRICAL CIRCUITS-ABSLUFT	TYP-GR	5	GRÜNGE	GRÜNGE
C6ga	PE-ELECTRICAL CIRCUITS-ABSLUFT	TYP-GR	5	GRÜNGE	GRÜNGE
C6gb	PE-ELECTRICAL CIRCUITS-ABSLUFT	TYP-GR	5	GRÜNGE	GRÜNGE
C6gc	PE-ELECTRICAL CIRCUITS-ABSLUFT	TYP-GR	5	GRÜNGE	GRÜNGE
C6gd	PE-ELECTRICAL CIRCUITS-ABSLUFT	TYP-GR	5	GRÜNGE	GRÜNGE
C6ge	PE-ELECTRICAL CIRCUITS-ABSLUFT	TYP-GR	5	GRÜNGE	GRÜNGE
C6gf	PE-ELECTRICAL CIRCUITS-ABSLUFT	TYP-GR	5	GRÜNGE	GRÜNGE
C6gg	PE-ELECTRICAL CIRCUITS-ABSLUFT	TYP-GR	5	GRÜNGE	GRÜNGE
C6gh	PE-ELECTRICAL CIRCUITS-ABSLUFT	TYP-GR	5	GRÜNGE	GRÜNGE
C6gi	PE-ELECTRICAL CIRCUITS-ABSLUFT	TYP-GR	5	GRÜNGE	GRÜNGE
C6gj	PE-ELECTRICAL CIRCUITS-ABSLUFT	TYP-GR	5	GRÜNGE	GRÜNGE
C6gk	PE-ELECTRICAL CIRCUITS-ABSLUFT	TYP-GR	5	GRÜNGE	GRÜNGE
C6gl	PE-ELECTRICAL CIRCUITS-ABSLUFT	TYP-GR	5	GRÜNGE	GRÜNGE
C6gm	PE-ELECTRICAL CIRCUITS-ABSLUFT	TYP-GR	5	GRÜNGE	GRÜNGE
C6gn	PE-ELECTRICAL CIRCUITS-ABSLUFT	TYP-GR	5	GRÜNGE	GRÜNGE
C6go	PE-ELECTRICAL CIRCUITS-ABSLUFT	TYP-GR	5	GRÜNGE	GRÜNGE
C6gp	PE-ELECTRICAL CIRCUITS-ABSLUFT	TYP-GR	5	GRÜNGE	GRÜNGE
C6gq	PE-ELECTRICAL CIRCUITS-ABSLUFT	TYP-GR	5	GRÜNGE	GRÜNGE
C6gr	PE-ELECTRICAL CIRCUITS-ABSLUFT	TYP-GR	5	GRÜNGE	GRÜNGE
C6gs	PE-ELECTRICAL CIRCUITS-ABSLUFT	TYP-GR	5	GRÜNGE	GRÜNGE
C6gt	PE-ELECTRICAL CIRCUITS-ABSLUFT	TYP-GR	5	GRÜNGE	GRÜNGE
C6gu	PE-ELECTRICAL CIRCUITS-ABSLUFT	TYP-GR	5	GRÜNGE	GRÜNGE
C6gv	PE-ELECTRICAL CIRCUITS-ABSLUFT	TYP-GR	5	GRÜNGE	GRÜNGE
C6gw	PE-ELECTRICAL CIRCUITS-ABSLUFT	TYP-GR	5	GRÜNGE	GRÜNGE
C6gx	PE-ELECTRICAL CIRCUITS-ABSLUFT	TYP-GR	5	GRÜNGE	GRÜNGE
C6gy	PE-ELECTRICAL CIRCUITS-ABSLUFT	TYP-GR	5	GRÜNGE	GRÜNGE
C6gz	PE-ELECTRICAL CIRCUITS-ABSLUFT	TYP-GR	5	GRÜNGE	GRÜNGE
C6ha	PE-ELECTRICAL CIRCUITS-ABSLUFT	TYP-GR	5	GRÜNGE	GRÜNGE
C6hb	PE-ELECTRICAL CIRCUITS-ABSLUFT	TYP-GR	5	GRÜNGE	GRÜNGE
C6hc	PE-ELECTRICAL CIRCUITS-ABSLUFT	TYP-GR	5	GRÜNGE	GRÜNGE
C6hd	PE-ELECTRICAL CIRCUITS-ABSLUFT	TYP-GR	5	GRÜNGE	GRÜNGE
C6he	PE-ELECTRICAL CIRCUITS-ABSLUFT	TYP-GR	5	GRÜNGE	GRÜNGE
C6hf	PE-ELECTRICAL CIRCUITS-ABSLUFT	TYP-GR	5	GRÜNGE	GRÜNGE
C6hg	PE-ELECTRICAL CIRCUITS-ABSLUFT	TYP-GR	5	GRÜNGE	GRÜNGE
C6hh	PE-ELECTRICAL CIRCUITS-ABSLUFT	TYP-GR	5	GRÜNGE	GRÜNGE
C6hi	PE-ELECTRICAL CIRCUITS-ABSLUFT	TYP-GR	5	GRÜNGE	GRÜNGE
C6hj	PE-ELECTRICAL CIRCUITS-ABSLUFT	TYP-GR	5	GRÜNGE	GRÜNGE
C6hk	PE-ELECTRICAL CIRCUITS-ABSLUFT	TYP-GR	5	GRÜNGE	GRÜNGE
C6hl	PE-ELECTRICAL CIRCUITS-ABSLUFT	TYP-GR	5	GRÜNGE	GRÜNGE
C6hm	PE-ELECTRICAL CIRCUITS-ABSLUFT	TYP-GR	5	GRÜNGE	GRÜNGE
C6hn	PE-ELECTRICAL CIRCUITS-ABSLUFT	TYP-GR	5	GRÜNGE	GRÜNGE
C6ho	PE-ELECTRICAL CIRCUITS-ABSLUFT	TYP-GR	5	GRÜNGE	GRÜNGE
C6hp	PE-ELECTRICAL CIRCUITS-ABSLUFT	TYP-GR	5	GRÜNGE	GRÜNGE
C6hq	PE-ELECTRICAL CIRCUITS-ABSLUFT	TYP-GR	5	GRÜNGE	GRÜNGE
C6hr	PE-ELECTRICAL CIRCUITS-ABSLUFT	TYP-GR	5	GRÜNGE	GRÜNGE
C6hs	PE-ELECTRICAL CIRCUITS-ABSLUFT	TYP-GR	5	GRÜNGE	GRÜNGE
C6ht	PE-EL

Pin.	LOCALISATION	(CTB) (CTT) (CCDCCDCT) TYPE	CAPTOT DESTINATION	DESTINATION
Cb	UNTERER DACHR-LSF	ARSP GTRO	sy	phdsgp phdsgb
Cy	PE ELECTRICE GCRCPT.-ELECTRICE ENV	TCT CC	s	phcccc phdsgb
[illegible]	[illegible]	[illegible]	[illegible]	[illegible]
Cbc	LSF GCRCPTCLE ENV-ELECTRICE BECE	ARSP ASTL	n	phdsgb phdsgy
Cbg	LSF GCRCPTCLE ENV-ELECTRICE	ARSP ASTL	d	phdsgb phdsgy
Cbd	UNTERER DACHR LSF-ELECTRICE	ARSP ASTL	e	phdsgb phdsgb
Cbf	UNTERER DACHR LSF-ELECTRICE	ARSP ASTL	f	phdsgb phdsgb
Cbh	UNTERER DACHR-PUTER ALLEINE	ARSP ASTL	h	phdsgb phdsgb
Cbk	UNTERER DACHR-APP DE BRAKE ENGEL	TRO	ca	phdsgb phdsgb
Cbm	ENV SOUT BRIE DUSSERE	ARSP ASTL	c	phdsgb phdsgb
Cbn	LUMBAGERE GCRCPT.-LOCHE DUSSE ELECT.	FRED	s	—— phdsgb
Cbp	MENSGCRE GCRCPT.-STEELLER LIT	FRED TRP	s	phdsgb phdsgb
Cbq	UNTERER DCRCCDCRCPT.-PANEEL DUSSE.	TRO	s	phdsgb phdsgb
Cbr	PE ELECTRICE GCRCPT.-TUBE PRESS	FRED TRP	s	phdsgb phdsgb
Cbs	PE ELECTRICE-GRT CRAIN ENGINE	DUSSEST	s	—— phdsgb
Cbt	MENSGCRE GCRCPT. DUSSE TOOL	FRED TRP	s	phdsgb phdsgb
Cbu	PE ELECTRICE-GRT CRAIN ENGINE	DUSSEST	s	—— phdsgb
Cbd	PRESSCRCPT.-AIR SEEL.-PRESSRE	DUSSEST	s	—— phdsgb
Cbf	LSF GCRCPTCLE ENV-ELECTRICE GRT	ENV	d	—— phdsgy
Cbh	LSF GCRCPTCLE ENV-ELECTRICE DUSSEST	ENV	d	—— phdsgy
Cbk	LSF GCRCPTCLE ENV-ELECTRICE	ENV	d	—— phdsgy
Cbm	UNTERER DACHR-PLAGERE DUST	TRO	s	—— phdsgb
Cbn	LATRCPTCRT TUNNEY LUSE	ARSP ASTL	s	phdsgb phdsgb
Cbp	PE ELECTRICE-PAR. CRAIN ENGI.	DUSSEST	s	—— phdsgb
Cbq	PE ELECTRICE-APP DE BRAKE	ENV	d	—— phdsgy
Cbr	MENSGCRE GCRCPT.-DUSSEUNDRCPT.ech	FRED TRP	s	phdsgb phdsgb
Cbs	MENSGCRE GCRCPT.-DUSSEUNDRCPT.ech	TRO	s	phdsgb phdsgb
Cbt	MENSGCRE GCRCPT.-PUSEL PRESSRE	FRED TRP	s	phdsgb phdsgb
Cbu	UNTERER DACHR BAUGE	RUSLEEE	d	phdsgy phdsgb
Cbd	UNTERER DACHR-PLAGERLIN, THE ENV.	BLAUPUNCRT	s	phdsgb ——
Cbf	UNTERER DACHR-PLAGERLIN, THE ENV.	BLAUPUNCRT	s	phdsgb ——
Cbh	LSF ENV PASTEL-ASSIST PUSEL LAT.	ARSP ENV	d	phdsgb ——
Cbk	LSF ENV PASTEL-ASSIST PUSEL LAT.	ARSP ENV	d	—— phdsgb
Cbm	LUMBAGERE GCRCPT.-DUSSE LUSE d LSF	ARSP ASTL	d	phdsgb phdsgb
Cbn	LUMBAGERE GCRCPT.-DUSSE LUSE d LSF	ARSP ASTL	d	phdsgb phdsgb
Cbp	PE DUST PASTEL-LUSE. DUSSE LUSE	ARSP ASTL	d	phdsgb phdsgb
Cbq	LUMBAGERE GCRCPT.-DUSSE LUSE d LSF	ARSP ASTL	d	phdsgb phdsgb
Cbr	LUMBAGERE GCRCPT.-DUSSE LUSE d LSF	ARSP ASTL	d	phdsgb phdsgb
Cbs	UNTERER DACHR-PLAGERER ESTOCLE	TRO	ca	phdsgb phdsgb
Cbt	UNTERER DACHR-APP CONTROEL	TRO	s	phdsgb phdsgb
Cbu	LUMBAGERE GCRCPT.-DUSSE LUSE g SIE	ARSP ASTL	d	phdsgb phdsgb
Cbd	LUMBAGERE GCRCPT.-DUSSE LUSE g SIE	ARSP ASTL	d	phdsgb phdsgb
Cbf	ENV SOUT BRIE-SEALLERSIE LUSE	ARSP ASTL	n	phdsgb phdsgb
Cbh	ENV DROP AIRE, ARP VERSEGRCPT.	DUSSEST	s	—— phdsgb
Cbk	ENV DROP AIRE, ARP VRCP ENGINE	DUSSEST	s	—— phdsgb
Cbm	ENV DROP AIRE, ARP MAIT PIE	TRO	s	phdsgb phdsgb
Cbn	ENV DROP AIRE, ARP MAIT LIE	TRO	s	phdsgb phdsgb
Cbp	ENV DROP AIRE, ARP MAIT TIRE LIE	ARSP ASTL	s	phdsgb phdsgb
Cbq	ENV DROP AIRE, ARP MAIT TIRE LIE	ARSP ASTL	s	phdsgb phdsgb
Cbr	ENV DROP AIRE, ARP LAD ROL TAIL TRO	TRO	s	phdsgb phdsgb
Cbs	ENV DROP AIRE, ARP GRCPT ROL TAIL.ARSPEGRCPT.		s	—— phdsgb
Cbt	GCCDCRCPT.GRT-.AIR.DRCP. DRE. ENV		s	—— phdsgb
Cbu	GCCDCRCPT.GRT-.AIR PIEDCC.ENV. FRED TRP		s	phdsgb phdsgb
Cbd	UNTERER DACHR ENV-DRT LAD ROL TL. TRO		s	phdsgb phdsgy
Cbf	UNTERER DACHR ENV-DRT TTCR VALCTR TRO		s	phdsgb phdsgy
Cbh	UNTERER DACHR ENV-DRT TTCR DE MAIT TRO		s	phdsgb phdsgy
Cbk	UNTERER DACHR ENV-DRT TTCR DE MAIT TRO		s	phdsgb phdsgy
Cbm	LSF GCRCPTCLE ENV-DRTTTCR	ENV	d	—— phdsgy

Pin.	LOCALISATION	(CTB) (CTT) (CCDCCDCT) TYPE	CAPTOT DESTINATION	DESTINATION
Cbu	LSF GCRCPTCLE ENV-CHAUFFAGE LUSE	ENV	d	—— phdsgy
Cbd	MENSGCRE DUSSE-STEEEL GCRCPTCLE	FRED TRP	s	phdsgb phdsgb
Cbf	PE DUST BRIE-MENSGCRE ARGEEL	DUSSEUNDRCPT	ch	phdsgb phdsgb
Cbh	UNTERER ACCLE GCRCPT.-AIR DUSSEE	FRED TRP	s	—— phdsgb
Cbk	MENSGCRE GCRCPT.-LSF LUTRER LAEEP	FRED TRP	s	phdsgb phdsgy
Cbm	MENSGCRE GCRCPT.-LSF LUTRER LAEEP	FRED TRP	s	phdsgb phdsgy
Cbn	HEAT BLAGE-BALLAGE ENV	ARSP ASTL	s	phdsgb phdsgb
Cbp	HEAT BLAGE-BALLAGE LUSE	ARSP ASTL	s	phdsgb phdsgb
Cbq	HEAT BLAGE-SUPERGRCPT	ARSP ASTL	s	phdsgb phdsgb
Cbr	HEAT BLAGE-SUPERGRCPT	ARSP ASTL	s	phdsgb phdsgb
Cbs	LSF GCRCPTCLE ENV-BRAKEGRCPT LUSE	ENV	d	—— phdsgy
Cbt	LSF GCRCPTCLE ENV-PAS DE BRAKE GRCPT	ENV	d	—— phdsgy
Cbu	LSF GCRCPTCLE ENV-BRAKEGRCPT LUSE	ENV	d	—— phdsgy
Cbd	PE DUST PASTEL-BAUL BELEP	ARSP ASTL	s	phdsgb phdsgb
Cbf	MENSGCRE GCRCPT.-BRAKE ALLAGEE	FRED TRP	s	phdsgb phdsgb
Cbh	PE ELECTRICE GCRCPT-LSF ELAGEEEE LUSE	TRT CC	s	phdsgb phdsgb
Cbk	PE ELECTRICE-APP DE BRAKE	ENV	d	—— phdsgy
Cbm	HEAT BLAGE-PRESSRE	ARSP ASTL	s	phdsgb phdsgb
Cbn	HEAT BLAGE-BALLAGE	ARSP ASTL	s	phdsgb phdsgb
Cbp	PE ELECTRICE GCRCPT-LSF ELAGEEEE LUSE	TRT CC	s	phdsgb phdsgb
Cbq	PE DROP LSF-ELAGEEEEEEEE ECTT LUSE	ARSP ASTL	s	phdsgb phdsgb
Cbr	PE ELECTRICE GCRCPT-LSF ELAGEEEE LUSE	TRT CC	s	phdsgb phdsgb
Cbs	HEAT BLAGE-BALLAGE	ARSP ASTL	s	phdsgb phdsgb
Cbt	PE DROP LSF-ELAGEEEEEEEE ECTT LUSE	ARSP ASTL	s	phdsgb phdsgb
Cbu	PE ELECTRICE GCRCPT-LSF ELAGEEEE LUSE	TRT CC	s	phdsgb phdsgb
Cbd	HEAT BLAGE-BALLAGE	ARSP ASTL	s	phdsgb phdsgb
Cbf	PE ELECTRICE GCRCPT-LSF ELAGEEEE LUSE	TRT CC	s	phdsgb phdsgb
Cbh	PE DROP LSF-ELAGEEEEEEEE ECTT LUSE	ARSP ASTL	s	phdsgb phdsgb
Cbk	PE ELECTRICE GCRCPT-LSF ELAGEEEE LUSE	TRT CC	s	phdsgb phdsgb
Cbm	HEAT BLAGE-BALLAGE	ARSP ASTL	s	phdsgb phdsgb
Cbn	PE ELECTRICE GCRCPT-LSF ELAGEEEE LUSE	TRT CC	s	phdsgb phdsgb
Cbp	PE DROP LSF-ELAGEEEEEEEE ECTT LUSE	ARSP ASTL	s	phdsgb phdsgb
Cbq	PE ELECTRICE GCRCPT-LSF ELAGEEEE LUSE	TRT CC	s	phdsgb phdsgb
Cbr	PE DROP LSF-ELAGEEEEEEEE ECTT LUSE	ARSP ASTL	s	phdsgb phdsgb
Cbs	PE ELECTRICE GCRCPT-LSF ELAGEEEE LUSE	TRT CC	s	phdsgb phdsgb
Cbt	HEAT BLAGE-BALLAGE	ARSP ASTL	s	phdsgb phdsgb
Cbu	PE ELECTRICE GCRCPT-LSF ELAGEEEE LUSE	TRT CC	s	phdsgb phdsgb
Cbd	MENSGCRE DUSSE-ELECTRICE	FRED TRP	s	phdsgb phdsgb
Cbf	PE DROP LSF-ELAGEEEEEEEE ECTT LUSE	ARSP ASTL	s	phdsgb phdsgb
Cbh	MENSGCRE GCRCPT-DUSSEUNDRCPT	FRED TRP	s	phdsgb phdsgb
Cbk	PE ELECTRICE GCRCPT DUSSE	ARSP GTRO	sa	phdsgb phdsgb
Cbm	PE ELECTRICE GCRCPT DUSSE	ARSP GTRO	sa	phdsgb phdsgb
Cbn	UNTERER DCRCCDCRCPT PRESSL.FRED TRP		s	phdsgb phdsgb
Cbp	PE ELECTRICE GCRCPT-DUSSE	DUSSEUNDRCPT	s	phdsgb ——
Cbq	PE ELECTRICE GCRCPT-PRESSLE DUS. TRP	ARSP GTRO	sa	phdsgb phdsgb
Cbr	MENSGCRE GCRCPT-WASSER TANKE BRAKE.	FRED TRP	s	phdsgb phdsgb
Cbs	LATRCPTCLE-WASSER TANKE BRAKE. ARSP	ASTL	s	phdsgb phdsgb
Cbt	PE ELECTRICE GCRCPT-DUSSEUNDRCPT	FRED TRP	s	phdsgb phdsgb
Cbu	GALLGER-DUSSEUNDRCPT	ARSP ASTL	s	phdsgb phdsgy
Cbd	HEAT BLAGE-LUFT RUSLEEEE	RUSLEEE	d	phdsgy phdsgb PHIEUX.DEF.ecd
Cbf	PE ELECTRICE GCRCPT-STEEEL.DUSSE RUSLEEEE	ARSP ASTL	ch	phdsgy phdsgb
Cbh	PE ELECTRICE GCRCPT-STEEEL ENV	ARSP ESP	ce	—— phdsgb
Cbk	PE ELECTRICE GCRCPT-STEEEL.ECTL.ARSP ASTL		s	—— phdsgb
Cbm	PE ARLIE-STEEEL.DUSSE PRESSTEEEEV ENV ARSP ASTL		s	phdsgb phdsgb
Cbn	PE ENDRT GCRCPT-STEEEL.ECTL.ARSP ASTL		s	—— phdsgb

Pin.	LOCALISATION	(CTB) (CTT) (CCDCCDCT) TYPE	CAPTOT DESTINATION	DESTINATION
Cbp	PE ENDRT GCRCPT-STEEEL.ECTL.DRE. ARSP ASTL		s	—— phdsgb
Cbq	PE ELECTRICE ACT DUSE-ENGINEEEEE ARSP ASTL		s	phdsgb phdsgb
Cbr	LSF GCRCPTCLE ENV-ETEEEEEE	ENV	d	—— phdsgy
Cbs	PE ELECTRICE GCRCPT-PRESSLE TEL WIRE	FRED TRP	ga	—— phdsgb
Cbt	GALLGER-PRESSEEEE	ARSP ASTL	e	phdsgb phdsgb PHIEUX.DEF.ecd
Cbu	GALLGER ENV-GCRCPTCLEEEE LIE	ENV	d	—— phdsgy
Cbd	PE ENDRT GCRCPT-STEEEL	FRED	s	phdsgb phdsgb
Cbf	PE ENDRT GCRCPT-STEEEL	FRED	s	phdsgb phdsgb
Cbh	GALLGER ENV-GCRCPTCLEEEE LIE	ENV	d	—— phdsgy
Cbk	LSF GCRCPTCLE ENV-ETEEEEEE	ARSP ASTL	s	phdsgb phdsgb
Cbm	LSF GCRCPTCLE ENV-GAT PRESSE	ENV	d	—— phdsgy
Cbn	UNTERER DCRCCDCRCPT PASTEL	ARSP ESP	s	phdsgb phdsgb PHIEUX.DEF.ecd
Cbp	LSF UNTERER DACHR-ASSIST.LSE ENV BLAUPUNCRT		s	phdsgb —— PHIEUX.DEF.ecd
Cbq	LSF GCRCPTCLE ENV-PRESSLE	ARSP ASTL	d	phdsgy phdsgb PHIEUX.DEF.ecd
Cbr	LSF GCRCPTCLE ENV-PRESSLE	ENV	d	—— phdsgy PHIEUX.DEF.ecd
Cbs	PE DUST-PASTEL-ASSIST.PRESSE	ARSP ASTL	s	phdsgb phdsgb
Cbt	UNTERER DACHR-ASSIST.LSE ENV BLAUPUNCRT		s	phdsgb —— PHIEUX.DEF.ecd
Cbu	LSF GCRCPTCLE ENV-PRESSLE	ENV	d	—— phdsgy PHIEUX.DEF.ecd
Cbd	PE DUST-PASTEL-ASSIST.PRESSE	ARSP ASTL	s	phdsgb phdsgb PHIEUX.DEF.ecd
Cbf	UNTERER DACHR-PAS.TELEGRAPHEUNGE T.D.L.		s	—— phdsgb
Cbh	UNTERER DACHR PASTEL-TAGESEUNGEUNGE T.D.L.		s	—— phdsgb
Cbk	UNTERER DACHR PASTEL-TAGESEUNGEUNGE	ARSP ASTL	s	phdsgb phdsgb
Cbm	PE LSF DUST PASTEL-STRAEEEEE	ARSP ASTL	d	phdsgb phdsgb
Cbn	PE LSF DUST PASTEL-STRAEEEEE	ARSP ASTL	d	phdsgb phdsgb
Cbp	DAGER BEEEEEEEEEN-A.A. TEILEEEE	RUSLEEE	d	phdsgy phdsgb PHIEUX.DEF.ecd
Cbq	UNTERER DACHR DAGER-A.A. TEILEEEE	ARSP ASTL	d	phdsgb phdsgb PHIEUX.DEF.ecd
Cbr	UNTERER DACHR-ASSISTEEEEE PEEEE	ARSP ASTL	s	phdsgb phdsgb PHIEUX.DEF.ecd
Cbs	UNTERER DACHR-A.A. TEILEEEE	ARSP ASTL	e	phdsgb phdsgb PHIEUX.DEF.ecd
Cbt	UNTERER DACHR-A.A. TEILEEEE	ARSP ASTL	e	phdsgb phdsgb PHIEUX.DEF.ecd
Cbu	UNTERER DACHR-A. DE RAIEEE PEEEE	ARSP ASTL	s	phdsgb phdsgb PHIEUX.DEF.ecd
Cbd	UNTERER DACHR-A. DE RAIEEE PEEEE	ARSP ASTL	s	phdsgb phdsgb PHIEUX.DEF.ecd
Cbf	UNTERER DACHR-A.A. EEEEEE-DUSTLEET ARSP	ASTL	s	phdsgb phdsgb PHIEUX.DEF.ecd
Cbh	UNTERER DACHR-STRAEEEEE-GEETTEEEL ENV	ENV	d	—— phdsgy PHIEUX.DEF.ecd
Cbk	UNTERER DACHR-LSF ENV STRAEEEEE	ARSP ASTL	s	phdsgb phdsgb PHIEUX.DEF.ecd
Cbm	MENSGCRE-PUSEL PIEEEE PUEEEE ENV.	FRED TRP	s	phdsgb phdsgb
Cbn	MENSGCRE-PUSEL PIEEEE PUEEEE ENV.	FRED TRP	s	phdsgb phdsgb
Cbp	LATRCPTCLE-LUMBAGERE-ETTEEEEEE	ARSP ASTL	d	phdsgy phdsgb PHIEUX.DEF.ecd
Cbq	EEEEEE-DUSTLEET-ECCEEEEE	RUSLEEE	d	phdsgy phdsgb PHIEUX.DEF.ecd
Cbr	UNTERER DCRCCDCRCPT PASTEL-TUEE	ARSP ESP	s	—— phdsgb PHIEUX.DEF.ecd
Cbs	UNTERER DCRCCDCRCPT PASTEL-TUEE	ARSP ESP	s	—— phdsgb PHIEUX.DEF.ecd
Cbt	UNTERER DCRCCDCRCPT PASTEL-TUEE	ARSP ESP	s	phdsgb PHIEUX.DEF.ecd
Cbu	PE ELECTRICE GCRCPT-STEEEL.ARSP	ASTL	ha	phdsgb
Cbd	PE ARLIE GCRCPT-ARE DE ENGINEEEE	WAIEEEE	s	hcccc
Cbf	PE ARLIE GCRCPT-ARE DE VALCTR	WAIEEEE	s	—— hcccc
Cbh	PE ARLIE GCRCPT-ARE DE ENGINEEEE	WAIEEEE	s	hcccc
Cbk	PE ARLIE GCRCPT-ARE DE VALCTR	WAIEEEE	s	—— hcccc
Cbm	LSF GCRCPTCLE ENV-ETEEEEEE	FRED TRP	s	phdsgb phdsgb
Cbn	PE ARLIE GCRCPT-ARE DE ENGINEEEE DEEEEEEEE		s	phdsgb phdsgb
Cbp	PE ARLIE GCRCPT-ARE DE VALCTR	WAIEEEE	s	—— hcccc
Cbq	PE ARLIE GCRCPT-ARE DE VALCTR	WAIEEEE	s	—— hcccc
Cbr	PE ARLIE GCRCPT-ARE DE ENGINEEEE DEEEEEEEE		s	phdsgb phdsgb
Cbs	PE ARLIE GCRCPT-ARE DE VALCTR	WAIEEEE	s	—— hcccc
Cbt	PE ARLIE GCRCPT-ARE DE VALCTR	WAIEEEE	s	—— hcccc
Cbu	PE ARLIE GCRCPT-ARE DE ENGINEEEE DEEEEEEEE		s	phdsgb phdsgb
Cbd	PE ARLIE GCRCPT-ARE DE VALCTR	WAIEEEE	s	—— hcccc
Cbf	PE ARLIE GCRCPT-ARE DE VALCTR	WAIEEEE	s	—— hcccc
Cbh	PE ARLIE GCRCPT-ARE DE ENGINEEEE DEEEEEEEE		s	phdsgb phdsgb
Cbk	PE ARLIE GCRCPT-ARE DE VALCTR	WAIEEEE	s	—— hcccc
Cbm	PE ARLIE GCRCPT-ARE DE VALCTR	WAIEEEE	s	—— hcccc

No.	LOCALISATION	COD	WIRE	CONDUCTOR			
		TYPE	GAUGE	RESISTANCE	RESISTANCE		
0a	UNIBUS PLACE-LH		ARSP GRNO			y	-----
0y	PE-CONTROL CIRCUIT-ELECTRIC EW	TYP	GN			s	-----
0b	PE-CONTROL CIRCUIT-ELECTRIC EW	TYP	GN			s	-----
0a	LH CONTROL EW-ELECTRIC BOX	ARSP	ASTL	n	-----		
0a	UNIBUS PLACE-LH-ELECTRIC	ARSP	ASTL	s	-----		
0a	UNIBUS PLACE-LH-ELECTRIC	ARSP	ASTL	e	-----		
0a	UNIBUS PLACE-LH-ELECTRIC	ARSP	ASTL	s	-----		
0a	UNIBUS PLACE-PUSH ALARM	ARSP	ASTL	s	-----		
0a	UNIBUS PLACE-AS W SPLICE CONN.	TYP	GN	s	-----		
0a	PE DOT BOX DIODES	ARSP	ASTL	e	-----		
0a	LUGGAGE CIRCUIT-LOCKS DOOR RIGHT.	FRES		s	-----		
0a	MONITOR CIRCUIT-STEPLIGHT	FRES	TRP	s	-----		
0a	UNIBUS CONNECTORS-PANEL PLACE.	TYP		s	-----		
0a	PE CONTROL CIRCUIT-TUBE PRESS	FRES	TRP	s	-----		
0a	LH CONTROL EW-TRAY CHECK CONNECT.	SCRSTST		s	-----		
0a	PE CONTROL CIRCUIT. SIGNS TOP	FRES	TRP	s	-----		
0a	LH CONTROL EW-CONNECTOR PRESS.	SCRSTST		s	-----		
0a	PE CONTROL CIRCUIT-AIR SHUT. CONNECT.	SCRSTST		s	-----		
0a	LH CONTROL EW-CONTROL DOOR	EWP		s	-----		
0y	LH CONTROL EW-CONTROL CRT	EWP		s	-----		
0a	LH CONTROL EW-CONTROL DOOR CONNECT.	EWP		s	-----		
0a	UNIBUS PLACE-ALARMS DOOR	TYP		s	-----		
0a	LAVATORY TOILET LIGHT	ARSP	ASTL	s	-----		
0a	LH CONTROL-PAS. CONT. CONN.	SCRSTST		s	-----		
0y	LH CONTROL EW-AS W SPLICE	EWP		s	-----		
0a	MONITOR CIRCUIT-CONNECTOR(S) ech	FRES	TRP	s	-----		
0a	MONITOR CIRCUIT-CONNECTOR(S) ech	FRES	TRP	s	-----		
0a	MONITOR CIRCUIT-CONNECTOR(S) ech	TYP		s	-----		
0a	MONITOR CIRCUIT-SPOKE WINDOWS	FRES	TRP	s	-----		
0a	UNIBUS PLACE-BAGGAGE	ARSP	ASTL	e	-----		
0y	LH CONTROL PLACE-ASSISTS. TOP STOP.	SCRSTST		s	-----		
0y	LH CONTROL PLACE-ASSISTS. TOP STOP.	SCRSTST		s	-----		
0y	LH PAS PLACE-ASSIST PUSH. LAMP.	ARSP	PP	s	-----		
0y	LH PAS PLACE-ASSIST PUSH. LAMP.	ARSP	PP	s	-----		
0y	LUGGAGE CIRCUIT-DOOR LOCKS L LH ARSP	ASTL	s	-----			
0y	LUGGAGE CIRCUIT-DOOR LOCKS L LH ARSP	ASTL	s	-----			
0a	PE DOT PLACE-LIGHT DOOR LOCKS ARSP	ASTL	s	-----			
0a	LUGGAGE CIRCUIT-DOOR LOCKS L LH ARSP	ASTL	s	-----			
0a	LUGGAGE CIRCUIT-DOOR LOCKS L LH ARSP	ASTL	s	-----			
0a	UNIBUS PLACE-WLAGGAGE RECEPTACLE	TYP	ss	-----			
0a	UNIBUS PLACE-AS STOPPER	TYP	s	-----			
0y	LUGGAGE CIRCUIT-DOOR LOCKS L LH ARSP	ASTL	s	-----			
0a	LUGGAGE CIRCUIT-DOOR LOCKS L LH ARSP	ASTL	s	-----			
0a	LH PAS PLACE-LIGHT CONTROL	ARSP	ASTL	s	-----		
0a	UNIBUS PLACE-AS PLAY BAR	TYP	s	-----			
0a	UNIBUS PLACE-AS PLAY BAR	TYP	s	-----			
0y	UNIBUS PLACE-AS PLAY BAR LH	ARSP	ASTL	s	-----		
0y	UNIBUS PLACE-AS PLAY BAR LH	ARSP	ASTL	s	-----		
0y	UNIBUS PLACE-AS PLAY BAR LH	ARSP	ASTL	s	-----		
0y	UNIBUS PLACE-AS PLAY BAR LH	ARSP	ASTL	s	-----		
0y	UNIBUS PLACE-AS CONTROL PAS.	TYP		s	-----		
0y	UNIBUS PLACE-AS PLAY BAR LH	ARSP	ASTL	s	-----		
0y	UNIBUS PLACE-AS PLAY BAR LH	ARSP	ASTL	s	-----		
0y	UNIBUS PLACE-AS PLAY BAR LH	ARSP	ASTL	s	-----		
0y	UNIBUS PLACE-AS CONTROL PAS.	TYP

		(CTD) (CTI) (CCDCCDI)					
No.	LOCALITY	TYPE	CAPTIT	BEGINNING	BEGINNING		
0a	UNTERER DACHR-LIN	ARZT-GINO	by	phdbqr	phdbqb		
0y	PE-ENSTTYPEN GERZPT-ELCTRIK EW	TYP	GE	s	phcccc	phcccc	
0z	PE-ENSTTYPEN GERZPT-ELCTRIK EW	TYP	GE	s	phcccc	phcccc	PHIIIIE.PHT.ccc
0a	LIE GERZPTLIN GTRZPT-ELCTRIK EIEE	ARZT-EZTL	n	phdbqr	phdbqb		
0ba	UNTERER DACHR LIE-ELCTRIK	ARZT-EZTL	d	phdbqr	phdbqb		
0bb	UNTERER DACHR DAE-ELCTRIK	ARZT-EZTL	e	phdbqr	phdbqb		
0bc	UNTERER DACHR-PUTZR ALLGEMEIN	ARZT-EZTL	h	phdbqr	phdbqb		
0bd	UNTERER DACHR-ABT W EMALT GTRZPT	TYP	ca	phdbqr	phdbqb		
0be	PHE.DOT PHIE DIEIEIEN	ARZT-EZTL	f	phdbqr	phdbqb		
0bz	LIPPAGEN GTRZPT-LCHZE DIEIEIE EIEIEN	PHE	s	———	phdbqb		
0ca	MENSCHE GTRZPT-PUTZLIN IIT	PHE-TRT	s	phdbqb	phdbqb		
0cb	UNTERER DOMCCDIEIEN-PAAPEL EIEIEN	TYP	s	phdbqb	phdbqb		
0cc	PE-ENSTTYPEN GTRZPT-TYRE PHEEE	PHE-TRT	s	phdbqb	phdbqb		
0cz	PE-ENSTTYPEN-EIEP UNEIN GEEHEIN	DIEIEIEIT	s	———	phdbqb		
0da	PEEEEETTYPEN GTRZPT. EIEIEN TOO	PHE-TRT	s	phdbqb	phdbqb		
0dz	PE-ENSTTYPEN-DIEIT UNEIN-GEEHEIN	DIEIEIEIT	s	———	phdbqb		
0ea	DIEIEIEIEIEIEN AIR-EIEIL.-EEHEIEN	DIEIEIEIT	s	———	phdbqb		
0eb	LIE GERZPTLIN ETW-EIEIEIEN DIEIEIEN	ETW	d	———	phcccc		
0ez	LIE GERZPTLIN ETW-EIEIEIEN EIEI	ETW	d	———	phcccc		
0fz	LIE GERZPTLIN ETW-EIEIEIEN DIEIEIEN	ETW	d	———	phcccc		
0ga	UNTERER DACHR-ALLGEMEIN DIEIT	TYP	h	———	phdbqb		
0gz	LAPPAGEEEE TTUNEEY LIEN	ARZT-EZTL	h	phdbqb	phdbqb		
0ha	PE-ENSTTYPEN-PAAL UNEIN-GTRZL	DIEIEIEIT	s	———	phdbqb		
0hz	PE-ENSTTYPEN-ETW-AAP EI EEHAIT	ETW	d	———	phcccc		
0ia	MENSCHE GTRZPT.-DIEIEIEIEIEIE

Pin.	LOCALISATION	(CTB) (CTT) (CONDUCTOR) TYPE	GAUGE	BRANCHING	REFERENCE
Cb	UNTERER DACHRAUM	ARSP GRÜ	1y	phidgp	phidgb
Cy	PE-ERSTPUNK GERÄTE-ELEKTRONIK EW	TYP CE	5	phiccc	phiccc
[illegible]	[illegible]	[illegible]	[illegible]	[illegible]	[illegible]
Cbr	LIN GERÄTEUNTER EW-ELEKTRIK RECH.	ARSP ROTL	h	phidgp	phidgb
Cbr	UNTERER DACHRAUM LIN-ELEKTRIK	ARSP ROTL	h	phidgp	phidgp
Cbr	UNTERER DACHRAUM RAU-ELEKTRIK	ARSP ROTL	e	phidgp	phidgb
Cbr	UNTERER DACHRAUM-PUTZA ALLGEMEI	ARSP ROTL	h	phidgp	phidgb
Cbr	UNTERER DACHRAUM-AV W BEMAT GÜNTH	TYP	1h	phidgb	phidgb
Cbr	RIE DOT BRIE DIESEL	ARSP ROTL	e	phidgp	phidgb
Cbr	LIGHBARER GERÄTE-LÜFTER DIESEL RECH.	FREI	5	———	phidgb
Cbr	BEHÄLTER GERÄTE-STEUERUNG 1U	FREI TRV	h	phidgb	phidgb
Cbr	UNTERER DACHRAUM GERÄTE-PANEL RECH.	TYP	h	phidgp	phidgb
Cbr	PE-ERSTPUNK GERÄTE-TÜRE FREIE	FREI TRV	h	phidgb	phidgb
Cgr	LIN GERÄTEUNTER EW-TÜRE GEÖFFNETE	BUSSIST	h	———	phidgb
Cgr	PEBERSTPUNK GERÄTE. ZEIGER TÜRE	FREI TRV	h	phidgb	phidgb
Cgr	LIN GERÄTEUNTER EW-TÜRE GEÖFN.	BUSSIST	h	———	phidgb
Cgr	PEBERSTPUNK-ZEIGER ALTE ÖGEL.-ÖFFNERE	BUSSIST	h	———	phidgb
Cgr	LIN GERÄTEUNTER EW-ÖFFNUNG DRÜCKER	EWW	d	———	phiccc
Cgr	LIN GERÄTEUNTER EW-ÖFFNUNG GRÜ	EWW	d	———	phiccc
Cgr	LIN GERÄTEUNTER EW-ÖFFNUNG SCHRÄNK	EWW	d	———	phiccc
Cgr	UNTERER DACHRAUM-ALLGEMEI DÜTT	TRV	h	———	phidgb
Cgr	LAMPENTÜTT STÄNDIT LIGHT	ARSP ROTL	h	phidgp	phidgb
Cgr	LIN GERÄTEUNTER-PANEL CHAUF-ÖFFNE.	BUSSIST	h	———	phidgb
Cgr	LIN GERÄTEUNTER-ARP W BEMAT	EWW	d	———	phiccc
Cgr	BEHÄLTER GERÄTE-STEUERUNGSRECH ECH	FREI TRV	h	phidgb	phidgb
Cgr	BEHÄLTER GERÄTE-STEUERUNGSRECH ECH	TYP	h	phidgb	phidgb
Cgr	BEHÄLTER GERÄTE-STEUERUNGSRECH ECH	TYP	h	phidgb	phidgb
Cgr	UNTERER DACHRAUM	BUSLEZ	d	phidgb	phidgb
Cgr	LIN GERÄTEUNTER-ARP-ÖFFNUNG TÜR EWW	EWW	d	———	phiccc
Cgr	LIN GERÄTEUNTER-ARP-ÖFFNUNG TÜR EWW	EWW	d	———	phiccc
Cgr	LIGHBARER GERÄTE-ÖFFNUNG DRÜCKER LIN	ARSP ROTL	h	phidgp	phidgb
Cgr	LIGHBARER GERÄTE-ÖFFNUNG DRÜCKER LIN	ARSP ROTL	h	phidgp	phidgb
Cgr	LIGHBARER GERÄTE-ÖFFNUNG DRÜCKER LIN	ARSP ROTL	h	phidgp	phidgb
Cgr	UNTERER DACHRAUM-ALLGEMEI DÜTT	TRV	h	———	phidgb
Cgr	LIN GERÄTEUNTER-ARP-ÖFFNUNG TÜR EWW	EWW	d	———	phiccc

PLOTTAGE = 3.18:1

DIODE CODE (D) Page H : 1

NO.	PAGE	AMP	*PREVOST	LOCATION	FUNCTION
D1	5	3A	561740	FR JCT PANEL	PRIMARY LO-AIR SONALERT
D2	5	3A	561740	FR JCT PANEL	SECONDARY LO-AIR SONALERT
D3	15	3A	063849	FR JCT PANEL	A/C & HEAT CONTROL SW
D4	15	3A	063849	FR JCT PANEL	WATER HEATER ON SIGNAL
D5	15	3A	060798	BATT.JCT PANEL	CONDENSER FAN RLY SUPPRESSOR
D6	15	3A	060798	BATT.JCT PANEL	EVAPORATOR FAN RLY SUPPRESSOR
D7	15	3A	560931	BATT.JCT PANEL	WATER VALVE SUPPRESSOR
D8	15	3A	560931	BATT.JCT PANEL	BYPASS VALVE SUPPRESSOR
D9	14	3A	561740	CHIME	CHIME SUPPRESSOR
D10	21	3A	062120	FR JCT PANEL	KNEELING SYSTEM FEED BACK
D11	7	3A	062120	FR JCT PANEL	FR RH. SIDE DIRECTIONNAL LTS
D12	21	3A	062588	FR SERVICE CPT	KNEELING SYSTEM
D13	21	3A	062588	FR SERVICE CPT	KNEELING SYSTEM
D14	21	3A	062588	FR SERVICE CPT	KNEELING SYSTEM
D15	31	3A	561740	FR DEST. SIGN	FR. DESTINATION SIGN
D16	31	3A	561740	FR DEST. SIGN	FR. DESTINATION SIGN
D17	7	3A	561740	FR JCT PANEL	HAZARD LH
D18	7	3A	561740	FR JCT PANEL	HAZARD RH
D19	6	3A	561740	FR JCT PANEL	DAYTIME RUNNING LTS
D20	6	3A	561740	FR JCT PANEL	DAYTIME RUNNING LTS
D21	7	3A	561740	UNDER DASH	AUDIBLE FLASHER RLY LH
D22	7	3A	561740	UNDER DASH	AUDIBLE FLASHER RLY RH
D60	16	3A	561740	RR JCT BOX	AUX. A/C COMPRESSOR CLUTCH
D61	15&16	3A	561740	RR JCT BOX	A/C COMPRESSOR CLUTCH
D78	17	3A	561740	LH CONSOLE	WATER HEATER TIMER & SW
D79	17	3A	561740	LH CONSOLE	WATER HEATER TIMER & SW

DIODE CODE (D) Page H : 1

NO.	PAGE	AMP	*PREVOST	LOCATION	FUNCTION

PLOTTAGE = 3.18:1

DIODE CODE (D) Page H :1

NO.	PAGE	AMP	#PREVOST	LOCATION	FUNCTION
D1	5	3A	561740	FR JCT PANEL	PRIMARY LO-AIR SONALERT
D2	5	3A	561740	FR JCT PANEL	SECONDARY LO-AIR SONALERT
D3	15	3A	063849	FR JCT PANEL	A/C & HEAT CONTROL SW
D4	15	3A	063849	FR JCT PANEL	WATER HEATER ON SIGNAL
D5	15	3A	060798	BATT.JCT PANEL	CONDENSER FAN RLY SUPPRESSOR
D6	15	3A	060798	BATT.JCT PANEL	EVAPORATOR FAN RLY SUPPRESSOR
D7	15	3A	560931	BATT.JCT PANEL	WATER VALVE SUPPRESSOR
D8	15	3A	560931	BATT.JCT PANEL	BYPASS VALVE SUPPRESSOR
D9	14	3A	561740	CHIME	CHIME SUPPRESSOR
D10	21	3A	062120	FR JCT PANEL	KNEELING SYSTEM FEED BACK
D11	7	3A	062120	FR JCT PANEL	FR RH. SIDE DIRECTIONNAL LTS
D12	21	3A	062588	FR SERVICE CPT	KNEELING SYSTEM
D13	21	3A	062588	FR SERVICE CPT	KNEELING SYSTEM
D14	21	3A	062588	FR SERVICE CPT	KNEELING SYSTEM
D15	31	3A	561740	FR DEST. SIGN	FR. DESTINATION SIGN
D16	31	3A	561740	FR DEST. SIGN	FR. DESTINATION SIGN
D17	7	3A	561740	FR JCT PANEL	HAZARD LH
D18	7	3A	561740	FR JCT PANEL	HAZARD RH
D19	6	3A	561740	FR JCT PANEL	DAYTIME RUNNING LTS
D20	6	3A	561740	FR JCT PANEL	DAYTIME RUNNING LTS
D21	7	3A	561740	UNDER DASH	AUDIBLE FLASHER RLY LH
D22	7	3A	561740	UNDER DASH	AUDIBLE FLASHER RLY RH
D60	16	3A	561740	RR JCT BOX	AUX. A/C COMPRESSOR CLUTCH
D61	15&16	3A	561740	RR JCT BOX	A/C COMPRESSOR CLUTCH
D78	17	3A	561740	LH CONSOLE	WATER HEATER TIMER & SW
D79	17	3A	561740	LH CONSOLE	WATER HEATER TIMER & SW
D81	21	3A	062588	FR SERVICE CPT	KNEELING ALARM
D82	21	3A	062588	FR SERVICE CPT	KNEELING ALARM
D83	9	3A	561740	RR JCT BOX	FAN CLUTCH W/RETARDER

DIODE CODE (D) Page H :1

NO.	PAGE	AMP	#PREVOST	LOCATION	FUNCTION

NO.	PAGE	AMP	•PREVOST	LOCATION	FUNCTION
D1	5	3A	561740	FR JCT PANEL	PRIMARY LO-AIR SONALERT
D2	5	3A	561740	FR JCT PANEL	SECONDARY LO-AIR SONALERT
D3	15	3A	063849	FR JCT PANEL	A/C & HEAT CONTROL SW
D4	15	3A	063849	FR JCT PANEL	WATER HEATER ON SIGNAL
D5	15	3A	060798	BATT. JCT PANEL	CONDENSER FAN RLY SUPPRESSOR
D6	15	3A	060798	BATT. JCT PANEL	EVAPORATOR FAN RLY SUPPRESSOR
D7	15	3A	560931	BATT. JCT PANEL	WATER VALVE SUPPRESSOR
D8	15	3A	560931	BATT. JCT PANEL	BYPASS VALVE SUPPRESSOR
D9	14	3A	561740	CHIME	CHIME SUPPRESSOR
D10	21	3A	062120	FR JCT PANEL	KNEELING SYSTEM FEED BACK
D11	7	3A	062120	FR JCT PANEL	FR RH. SIDE DIRECTIONNAL LTS
D12	21	3A	062588	FR SERVICE CPT	KNEELING SYSTEM
D13	21	3A	062588	FR SERVICE CPT	KNEELING SYSTEM
D14	21	3A	062588	FR SERVICE CPT	KNEELING SYSTEM
D15	31	3A	561740	FR DEST. SIGN	FR. DESTINATION SIGN
D16	31	3A	561740	FR DEST. SIGN	FR. DESTINATION SIGN
D17	7	3A	561740	FR JCT PANEL	HAZARD LH
D18	7	3A	561740	FR JCT PANEL	HAZARD RH
D19	6	3A	561740	FR JCT PANEL	DAYTIME RUNNING LTS
D20	6	3A	561740	FR JCT PANEL	DAYTIME RUNNING LTS
D21	7	3A	561740	UNDER DASH	AUDIBLE FLASHER RLY LH
D22	7	3A	561740	UNDER DASH	AUDIBLE FLASHER RLY RH
D60	16	3A	561740	RR JCT BOX	AUX. A/C COMPRESSOR CLUTCH
D61	15&16	3A	561740	RR JCT BOX	A/C COMPRESSOR CLUTCH
D78	17	3A	561740	LH CONSOLE	WATER HEATER TIMER & SW
D79	17	3A	561740	LH CONSOLE	WATER HEATER TIMER & SW
D81	21	3A	062588	FR SERVICE CPT	KNEELING ALARM
D82	21	3A	062588	FR SERVICE CPT	KNEELING ALARM
D83	9	3A	561740	RR JCT BOX	FAN CLUTCH W/RETARDER
D84	1	3A	060798	RR JCT BOX	STARTER - SUPPRESSOR COIL RLY

DIODE CODE (D) PAGE H : 1

NO.	PAGE	AMP	•PREVOST	LOCATION	FUNCTION

RELAYS CODE (R) Page I:1

NO.	PAGE	COIL V	*PREVOST	LOCATION	FUNCTION
R1	2	24V	561991	FR JCT PANEL	ENGINE RUN (24) FR
R2	2	24V	561991	FR JCT PANEL	ENGINE RUN (12) FR
R3	1	24V	561707	BAT.JCT.PANEL	FIELD RELAY
R4	1	24V	561005	RR JCT BOX	STARTING MOTOR
R9	8	24V	561707	RR JCT BOX	BACK-UP LTS
R12	5	12V	562092	FR JCT PANEL	ELECTRICAL HORNS
R13	6	24V	561707	FR JCT PANEL	FOG LTS
R14	6	24V	561707	FR JCT PANEL	NIGHT'S BLINKER
R15	6	24V	561707	FR JCT PANEL	FR MARKER LTS
R16	6	24V	561707	FR JCT PANEL	IDENT. & CLEARANCE LTS
R17	6	24V	561707	RR JCT BOX	TAIL,LICENCE,MARKER-RR LTS
R18	6	24V	561707	FR JCT PANEL	DAYTIME RUN LTS-CANCEL
R19	6	24V	561707	FR JCT PANEL	HI-BEAM
R20	6	24V	561707	FR JCT PANEL	LO-BEAM
R22	3	24V	561707	FR SERV JCT BOX	DDEC III FAST IDLE SIGNAL
R23	3	24V	561707	RR JCT BOX	DDEC III 12V IGNITION
R24	4	24V	561707	BAT JCT PANEL	WORLD TRANSMISSION 12V IGN.
R25	3	24V	561707	FR SERV JCT BOX	BRAKE SW-DDEC CRUISE CTR
R26	8	24V	561707	RR JCT BOX	STOP LTS
R27	27	24V	560407	GALLEY	GALLEY CHARGER
R28	27	24V	561014	GALLEY	GALLEY CHARGER
R29	15	24V	561005	BAT JCT PANEL	A/C CONDENSER FAN
R30	15	24V	561005	BAT JCT PANEL	A/C EVAPORATOR FAN
R31	15	24V	561707	BAT JCT PANEL	A/C WATER PUMP
R32	1	24V	561991	BAT JCT PANEL	12V RR CUT-IN RLY
R33	15	12V	561538	FR JCT PANEL	A/C BLOWER CUT-IN
R34	15	24V	561707	RR JCT BOX	A/C WARNING LT
R35	15	24V	561707	FR JCT BOX	A/C WATER VALVE
R36	16	24V	561707	RR JCT BOX	AUX. A/C COMPRESSOR CLUTCH
R37	1	24V	561707	RR JCT BOX	GENERATOR-12VAC RLY SIGN
R38	16	24V	561707	RR JCT BOX	AUX. A/C FAN MOTOR
R39	13	24V	561707	RR JCT BOX	24V FLUORESCENT
R42	1	24V	561991	BAT JCT PANEL	12V FRONT CUT-IN RLY
R43	15	24V	561707	FR JCT BOX	WATER HEATER-BYPASS VALVE
R44	1	24V	561991	BAT JCT PANEL	12V FRONT CUT-IN RLY
R45	12	24V	561707	RR JCT BOX	READING LTS
R46	7	24V	561707	UNDER INST PANEL LH	DIRECTIONNAL LTS
R47	7	24V	561707	UNDER INST PANEL RH	DIRECTIONNAL LTS
R49	24	24V	561707	FR SERV JCT BOX	ABS - SERVICE BRAKE RLY
R50	24	24V	561707	FR SERV JCT BOX	ABS - VR2 RLY
R51	24	24V	561707	FR SERV JCT BOX	ABS - WARNING RLY
R52	24	24V	561707	FR SERV JCT BOX	ABS - VR1 RLY
R53	2	24V	561991	RR JCT BOX	ENGINE RUN 24V RR
R54	2	24V	561991	RR JCT BOX	ENGINE RUN 12V RR
R57	6	24V	561707	FR JCT PANEL	DAY'S BLINKER
R60	6	12V	561538	FR JCT PANEL	DAYTIME RUN LTS
R62	7	24V	561707	BEHIND RH CONS	RH CORNERING
R63	7	24V	561707	BEHIND RH CONS	LH CORNERING
R66	19	24V	562341	RR JCT BOX	UNLOAD TAG-TIME DELAY OFF
R67	19	24V	561707	RR JCT BOX	UNLOAD TAG SYSTEM
R69	22	12V	562092	FR JCT PANEL	LUGG DOOR LOCK
R70	22	12V	562092	FR JCT PANEL	LUGG DOOR UNLOCK
R71	22	12V	562092	FR JCT PANEL	LUGG DOOR LOCK TT LT
R72	11	24V	561707	FR JCT PANEL	DASH EMERGENCY AISLE-LTS
R73	28-29	24V	561557	FR JCT PANEL	SOUND SYSTEM
R74	22	12V	562092	RR JCT BOX	LUGG DOOR LOCK
R75	22	12V	562092	RR JCT BOX	LUGG DOOR UNLOCK
R76	8	24V	561707	RR JCT BOX	STOP LTS-ENG. BRK & RET. SYST.

RELAYS CODE (R) Page I:1

NO.	PAGE	COIL V	*PREVOST	LOCATION	FUNCTION
R77	7	12V	562092	UNDER DASH	AUDIBLE FLASHER RLY
R78	5	24V	561707	RR JCT BOX	DDEC3 FAN CONTROL SPEED#1
R79	5	24V	561707	RR JCT BOX	DDEC3 FAN CONTROL SPEED#2
R80	23	24V	561707	FR SERV JCT BOX	ENGINE BRAKE SYSTEM-WT CONTROL
R81	23	24V	561707	FR SERV JCT BOX	ENGINE BRAKE SYSTEM-WT CONTROL
R82	23	24V	561707	FR SERV JCT BOX	RETARDER SYSTEM
R83	17	24V	561707	RR JCT BOX	WATER HEATER WEBASTO-PUMP
R84	16	24V	561707	RR JCT BOX	AUX. A/C RAD. FAN CLUTCH CTRL
R86	21	24V	561707	FR SERVICE CPT	KNEELING SYSTEM
R87	21	24V	561707	FR SERVICE CPT	KNEELING SYSTEM
R88	21	24V	561707	FR SERVICE CPT	KNEELING SYSTEM
R91	30	24V	561707	FR JCT PANEL	VIDEO SYSTEM & TV RECEIVER

RELAYS CODE (R)

Page 1:1

NO.	PAGE	COIL V	*PREVOST	LOCATION	FUNCTION
R1	2	24V	561991	FR JCT PANEL	ENGINE RUN (24) FR
R2	2	24V	561991	FR JCT PANEL	ENGINE RUN (12) FR
R3	1	24V	561707	BAT.JCT.PANEL	FIELD RELAY
R4	1	24V	561005	RR JCT BOX	STARTING MOTOR
R9	8	24V	561707	RR JCT BOX	BACK-UP LTS
R12	5	12V	562092	FR JCT PANEL	ELECTRICAL HORNS
R13	6	24V	561707	FR JCT PANEL	FOG LTS
R14	6	24V	561707	FR JCT PANEL	NIGHT'S BLINKER
R15	6	24V	561707	FR JCT PANEL	FR MARKER LTS
R16	6	24V	561707	FR JCT PANEL	IDENT. & CLEARANCE LTS
R17	6	24V	561707	RR JCT BOX	TAIL,LICENCE,MARKER-RR LTS
R18	6	24V	561707	FR JCT PANEL	DAYTIME RUN LTS-CANCEL
R19	6	24V	561707	FR JCT PANEL	HI-BEAM
R20	6	24V	561707	FR JCT PANEL	LO-BEAM
R22	3	24V	561707	FR SERV JCT BOX	DDEC III FAST IDLE SIGNAL
R23	3	24V	561707	RR JCT BOX	DDEC III 12V IGNITION
R24	4	24V	561707	BAT JCT PANEL	WORLD TRANSMISSION 12V IGN.
R25	3	24V	561707	FR SERV JCT BOX	BRAKE SW-DDEC CRUISE CTR
R26	8	24V	561707	RR JCT BOX	STOP LTS
R27	27	24V	560407	GALLEY	GALLEY CHARGER
R28	27	24V	561014	GALLEY	GALLEY CHARGER
R29	15	24V	561005	BAT JCT PANEL	A/C CONDENSER FAN
R30	15	24V	561005	BAT JCT PANEL	A/C EVAPORATOR FAN
R31	15	24V	561707	BAT JCT PANEL	A/C WATER PUMP
R32	1	24V	561991	BAT JCT PANEL	12V RR CUT-IN RLY
R33	15	12V	561538	FR JCT PANEL	A/C BLOWER CUT-IN
R34	15	24V	561707	RR JCT BOX	A/C WARNING LT
R35	15	24V	561707	FR JCT BOX	A/C WATER VALVE
R36	16	24V	561707	RR JCT BOX	AUX. A/C COMPRESSOR CLUTCH
R37	1	24V	561707	RR JCT BOX	GENERATOR-12VAC RLY SIGN
R38	16	24V	561707	RR JCT BOX	AUX. A/C FAN MOTOR
R39	13	24V	561707	RR JCT BOX	24V FLUORESCENT
R42	1	24V	561991	BAT JCT PANEL	12V FRONT CUT-IN RLY
R43	15	24V	561707	FR JCT BOX	WATER HEATER-BYPASS VALVE
R44	1	24V	561991	BAT JCT PANEL	12V FRONT CUT-IN RLY
R45	12	24V	561707	RR JCT BOX	READING LTS
R46	7	24V	561707	UNDER INST PANEL	LH DIRECTIONNAL LTS
R47	7	24V	561707	UNDER INST PANEL	RH DIRECTIONNAL LTS
R49	24	24V	561707	FR SERV JCT BOX	ABS - SERVICE BRAKE RLY
R50	24	24V	561707	FR SERV JCT BOX	ABS - VR2 RLY
R51	24	24V	561707	FR SERV JCT BOX	ABS - WARNING RLY
R52	24	24V	561707	FR SERV JCT BOX	ABS - VR1 RLY
R53	2	24V	561991	RR JCT BOX	ENGINE RUN 24V RR
R54	2	24V	561991	RR JCT BOX	ENGINE RUN 12V RR
R57	6	24V	561707	FR JCT PANEL	DAY'S BLINKER
R60	6	12V	561538	FR JCT PANEL	DAYTIME RUN LTS
R62	7	24V	561707	BEHIND RH CONS	RH CORNERING
R63	7	24V	561707	BEHIND RH CONS	LH CORNERING
R66	19	24V	562341	RR JCT BOX	UNLOAD TAG-TIME DELAY OFF
R67	19	24V	561707	RR JCT BOX	UNLOAD TAG SYSTEM
R69	22	12V	562092	FR JCT PANEL	LUGG DOOR LOCK
R70	22	12V	562092	FR JCT PANEL	LUGG DOOR UNLOCK
R71	22	12V	562092	FR JCT PANEL	LUGG DOOR LOCK TT LT
R72	11	24V	561707	FR JCT PANEL	DASH EMERGENCY AISLE-LTS
R73	28-29	24V	561557	FR JCT PANEL	SOUND SYSTEM
R74	22	12V	562092	RR JCT BOX	LUGG DOOR LOCK
R75	22	12V	562092	RR JCT BOX	LUGG DOOR UNLOCK
R76	8	24V	561707	RR JCT BOX	STOP LTS-ENG. BRK & RET. SYST.

RELAYS CODE (R)

Page 1:1

NO.	PAGE	COIL V	*PREVOST	LOCATION	FUNCTION
R77	7	12V	562092	UNDER DASH	AUDIBLE FLASHER RLY
R78	5	24V	561707	RR JCT BOX	DDEC3 FAN CONTROL SPEED#1
R79	5	24V	561707	RR JCT BOX	DDEC3 FAN CONTROL SPEED#2
R80	23	24V	561707	FR SERV JCT BOX	ENGINE BRAKE SYSTEM-WT CONTROL
R81	23	24V	561707	FR SERV JCT BOX	ENGINE BRAKE SYSTEM-WT CONTROL
R82	23	24V	561707	FR SERV JCT BOX	RETARDER SYSTEM
R83	17	24V	561707	RR JCT BOX	WATER HEATER WEBASTO-PUMP
R84	16	24V	561707	RR JCT BOX	AUX. A/C RAD. FAN CLUTCH CTRL
R86	21	24V	561707	FR SERVICE CPT	KNEELING SYSTEM
R87	21	24V	561707	FR SERVICE CPT	KNEELING SYSTEM
R88	21	24V	561707	FR SERVICE CPT	KNEELING SYSTEM
R91	30	24V	561707	FR JCT PANEL	VIDEO SYSTEM & TV RECEIVER
R99	9	24V	561707	RR JCT BOX	RADIATOR FAN CLUTCH
RF1	9	24V	561707	RR JCT BOX	FAN CLUTCH W. A/C OR RET.SP#1
RF2	9	24V	561707	RR JCT BOX	FAN CLUTCH W. A/C OR RET.SP#2
RF3	9	24V	560772	RR JCT BOX	TIME DELAY

RELAYS CODE (R)

Page 1:1

NO.	PAGE	COIL V	*PREVOST	LOCATION	FUNCTION
R1	2	24V	561991	FR JCT PANEL	ENGINE RUN (24) FR
R2	2	24V	561991	FR JCT PANEL	ENGINE RUN (12) FR
R3	1	24V	561707	BAT.JCT.PANEL	FIELD RELAY
R4	1	24V	561005	RR JCT BOX	STARTING MOTOR
R9	8	24V	561707	RR JCT BOX	BACK-UP LTS
R12	5	12V	562092	FR JCT PANEL	ELECTRICAL HORNS
R13	6	24V	561707	FR JCT PANEL	FOG LTS
R14	6	24V	561707	FR JCT PANEL	NIGHT'S BLINKER
R15	6	24V	561707	FR JCT PANEL	FR MARKER LTS
R16	6	24V	561707	FR JCT PANEL	IDENT. & CLEARANCE LTS
R17	6	24V	561707	RR JCT BOX	TAIL,LICENCE,MARKER-RR LTS
R18	6	24V	561707	FR JCT PANEL	DAYTIME RUN LTS-CANCEL
R19	6	24V	561707	FR JCT PANEL	HI-BEAM
R20	6	24V	561707	FR JCT PANEL	LO-BEAM
R22	3	24V	561707	FR SERV JCT BOX	DDEC III FAST IDLE SIGNAL
R23	3	24V	561707	RR JCT BOX	DDEC III 12V IGNITION
R24	4	24V	561707	BAT JCT PANEL	WORLD TRANSMISSION 12V IGN.
R25	3	24V	561707	FR SERV JCT BOX	BRAKE SW-DDEC CRUISE CTR
R26	8	24V	561707	RR JCT BOX	STOP LTS
R27	27	24V	560407	GALLEY	GALLEY CHARGER
R28	27	24V	561014	GALLEY	GALLEY CHARGER
R29	15	24V	561005	BAT JCT PANEL	A/C CONDENSER FAN
R30	15	24V	561005	BAT JCT PANEL	A/C EVAPORATOR FAN
R31	15	24V	561707	BAT JCT PANEL	A/C WATER PUMP
R32	1	24V	561991	BAT JCT PANEL	12V RR CUT-IN RLY
R33	15	12V	561538	FR JCT PANEL	A/C BLOWER CUT-IN
R34	15	24V	561707	RR JCT BOX	A/C WARNING LT
R35	15	24V	561707	FR JCT BOX	A/C WATER VALVE
R36	16	24V	561707	RR JCT BOX	AUX. A/C COMPRESSOR CLUTCH
R37	1	24V	561707	RR JCT BOX	GENERATOR-12VAC RLY SIGN
R38	16	24V	561707	RR JCT BOX	AUX. A/C FAN MOTOR
R39	13	24V	561707	RR JCT BOX	24V FLUORESCENT
R42	1	24V	561991	BAT JCT PANEL	12V FRONT CUT-IN RLY
R43	15	24V	561707	FR JCT BOX	WATER HEATER-BYPASS VALVE
R44	1	24V	561991	BAT JCT PANEL	12V FRONT CUT-IN RLY
R45	12	24V	561707	RR JCT BOX	READING LTS
R46	7	24V	561707	UNDER INST PANEL	LH DIRECTIONNAL LTS
R47	7	24V	561707	UNDER INST PANEL	RH DIRECTIONNAL LTS
R49	24	24V	561707	FR SERV JCT BOX	ABS - SERVICE BRAKE RLY
R50	24	24V	561707	FR SERV JCT BOX	ABS - VR2 RLY
R51	24	24V	561707	FR SERV JCT BOX	ABS - WARNING RLY
R52	24	24V	561707	FR SERV JCT BOX	ABS - VR1 RLY
R53	2	24V	561991	RR JCT BOX	ENGINE RUN 24V RR
R54	2	24V	561991	RR JCT BOX	ENGINE RUN 12V RR
R57	6	24V	561707	FR JCT PANEL	DAY'S BLINKER
R60	6	12V	561538	FR JCT PANEL	DAYTIME RUN LTS
R62	7	24V	561707	BEHIND RH CONS	RH CORNERING
R63	7	24V	561707	BEHIND RH CONS	LH CORNERING
R66	29-30	24V	561707	SND SYS JCT PAN	VIDEO SYSTEM
R67	28	24V	561707	SND SYS JCT PAN	SOUND SYSTEM RADIO
R68	28	24V	561991	SND SYS JCT PAN	SOUND SYSTEM - 24V IGNITION
R69	22	12V	562092	FR JCT PANEL	LUGG DOOR LOCK
R70	22	12V	562092	FR JCT PANEL	LUGG DOOR UNLOCK
R71	22	12V	562092	FR JCT PANEL	LUGG DOOR LOCK TT LT
R72	11	24V	561707	FR JCT PANEL	DASH EMERGENCY AISLE-LTS
R73	28-29	24V	561557	FR JCT PANEL	SOUND SYSTEM PRIOR REV. 008
R74	22	12V	562092	RR JCT BOX	LUGG DOOR LOCK
R75	22	12V	562092	RR JCT BOX	LUGG DOOR UNLOCK
R76	8	24V	561707	RR JCT BOX	STOP LTS-ENG. BRK & RET. SYST.

RELAYS CODE (R) Page 1:1

NO.	PAGE	COIL V	*PREVOST	LOCATION	FUNCTION
R77	7	12V	562092	UNDER DASH	AUDIBLE FLASHER RLY
R78	5	24V	561707	RR JCT BOX	DDEC3 FAN CONTROL SPEED#1
R79	5	24V	561707	RR JCT BOX	DDEC3 FAN CONTROL SPEED#2
R80	23	24V	561707	FR SERV JCT BOX	ENGINE BRAKE SYSTEM-WT CONTROL
R81	23	24V	561707	FR SERV JCT BOX	ENGINE BRAKE SYSTEM-WT CONTROL
R82	23	24V	561707	FR SERV JCT BOX	RETARDER SYSTEM
R83	17	24V	561707	RR JCT BOX	WATER HEATER WEBASTO-PUMP
R84	16	24V	561707	RR JCT BOX	AUX. A/C RAD. FAN CLUTCH CTRL
R86	21	24V	561707	FR SERVICE CPT	KNEELING SYSTEM
R87	21	24V	561707	FR SERVICE CPT	KNEELING SYSTEM
R88	21	24V	561707	FR SERVICE CPT	KNEELING SYSTEM
R91	30	24V	561707	FR JCT PANEL	VIDEO SYSTEM & TV RECEIVER
R99	9	24V	561707	RR JCT BOX	RADIATOR FAN CLUTCH
RF1	9	24V	561707	RR JCT BOX	FAN CLUTCH W. A/C OR RET.SP#1
RF2	9	24V	561707	RR JCT BOX	FAN CLUTCH W. A/C OR RET.SP#2
RF3	9	24V	560772	RR JCT BOX	TIME DELAY

NO.	PAGE	COIL V	•PREVOST	LOCATION	FUNCTION
R1	2	24V	561991	FR JCT PANEL	ENGINE RUN (24) FR
R2	2	24V	561991	FR JCT PANEL	ENGINE RUN (12) FR
R3	1	24V	561707	BAT.JCT.PANEL	FIELD RELAY
R4	1	24V	561005	RR JCT BOX	STARTING MOTOR
R9	8	24V	561707	RR JCT BOX	BACK-UP LTS
R12	5	12V	562092	FR JCT PANEL	ELECTRICAL HORNS
R13	6	24V	561707	FR JCT PANEL	FOG LTS
R14	6	24V	561707	FR JCT PANEL	NIGHT'S BLINKER
R15	6	24V	561707	FR JCT PANEL	FR MARKER LTS
R16	6	24V	561707	FR JCT PANEL	IDENT. & CLEARANCE LTS
R17	6	24V	561707	RR JCT BOX	TAIL.LICENCE.MARKER-RR LTS
R18	6	24V	561707	FR JCT PANEL	DAYTIME RUN LTS-CANCEL
R19	6	24V	561707	FR JCT PANEL	HI-BEAM
R20	6	24V	561707	FR JCT PANEL	LO-BEAM
R22	3	24V	561707	FR SERV JCT BOX	DDEC III FAST IDLE SIGNAL
R23	3	24V	561707	RR JCT BOX	DDEC III 12V IGNITION
R24	4	24V	561707	BAT JCT PANEL	WORLD TRANSMISSION 12V IGN.
R25	3	24V	561707	FR SERV JCT BOX	BRAKE SW-DDEC CRUISE CTR
R26	8	24V	561707	RR JCT BOX	STOP LTS
R27	27	24V	560407	GALLEY	GALLEY CHARGER
R28	27	24V	561014	GALLEY	GALLEY CHARGER
R29	15	24V	561005	A/C JCT. BOX	A/C CONDENSER FAN
R30	15	24V	561005	A/C JCT. BOX	A/C EVAPORATOR FAN
R31	15	24V	561707	BAT JCT PANEL	A/C WATER PUMP
R32	1	24V	561991	BAT JCT PANEL	12V RR CUT-IN RLY
R33	15	12V	561538	FR JCT PANEL	A/C BLOWER CUT-IN
R34	15	24V	561707	RR JCT BOX	A/C WARNING LT
R35	15	24V	561707	FR JCT BOX	A/C WATER VALVE
R36	16	24V	561707	RR JCT BOX	AUX. A/C COMPRESSOR CLUTCH
R37	1	24V	561707	RR JCT BOX	GENERATOR-12VAC RLY SIGN
R38	16	24V	561707	RR JCT BOX	AUX. A/C FAN MOTOR
R39	13	24V	561707	RR JCT BOX	24V FLUORESCENT
R40	15	24V	561014	A/C JCT. BOX	A/C CONDENSER FAN
R41	15	24V	561991	A/C JCT. BOX	A/C CONDENSER FAN
R42	1	24V	561991	BAT JCT PANEL	12V FRONT CUT-IN RLY
R43	15	24V	561707	FR JCT BOX	WATER HEATER-BYPASS VALVE
R44	1	24V	561991	BAT JCT PANEL	12V FRONT CUT-IN RLY
R45	12	24V	561707	RR JCT BOX	READING LTS
R46	7	24V	561707	UNDER INST PANEL	LH DIRECTIONNAL LTS
R47	7	24V	561707	UNDER INST PANEL	RH DIRECTIONNAL LTS
R49	24	24V	561707	FR SERV JCT BOX	ABS - SERVICE BRAKE RLY
R50	24	24V	561707	FR SERV JCT BOX	ABS - VR2 RLY
R51	24	24V	561707	FR SERV JCT BOX	ABS - WARNING RLY
R52	24	24V	561707	FR SERV JCT BOX	ABS - VR1 RLY
R53	2	24V	561991	RR JCT BOX	ENGINE RUN 24V RR
R54	2	24V	561991	RR JCT BOX	ENGINE RUN 12V RR
R57	6	24V	561707	FR JCT PANEL	DAY'S BLINKER
R60	6	12V	561538	FR JCT PANEL	DAYTIME RUN LTS
R62	7	24V	561707	BEHIND RH CONS	RH CORNERING
R63	7	24V	561707	BEHIND RH CONS	LH CORNERING
R66	29-30	24V	561707	SND SYS JCT PAN	VIDEO SYSTEM
R67	28	24V	561707	SND SYS JCT PAN	SOUND SYSTEM RADIO
R68	28	24V	561991	SND SYS JCT PAN	SOUND SYSTEM - 24V IGNITION
R69	22	12V	562092	FR JCT PANEL	LUGG DOOR LOCK
R70	22	12V	562092	FR JCT PANEL	LUGG DOOR UNLOCK
R71	22	12V	562092	FR JCT PANEL	LUGG DOOR LOCK TT LT
R72	11	24V	561707	FR JCT PANEL	DASH EMERGENCY AISLE-LTS

RELAYS CODE (R) PAGE I : 1

NO.	PAGE	COIL V	•PREVOST	LOCATION	FUNCTION
R73	28-29	24V	561557	FR JCT PANEL	SOUND SYSTEM PRIOR REV. 008
R74	22	12V	562092	RR JCT BOX	LUGG DOOR LOCK
R75	22	12V	562092	RR JCT BOX	LUGG DOOR UNLOCK
R76	8	24V	561707	RR JCT BOX	STOP LTS-ENG. BRK & RET. SYST.
R77	7	12V	562092	UNDER DASH	AUDIBLE FLASHER RLY
R78	5	24V	561707	RR JCT BOX	DDEC3 FAN CONTROL SPEED•1
R79	5	24V	561707	RR JCT BOX	DDEC3 FAN CONTROL SPEED•2
R80	23	24V	561707	FR SERV JCT BOX	ENGINE BRAKE SYSTEM-WT CONTROL
R81	23	24V	561707	FR SERV JCT BOX	ENGINE BRAKE SYSTEM-WT CONTROL
R82	23	24V	561707	FR SERV JCT BOX	RETARDER SYSTEM
R83	17	24V	561707	RR JCT BOX	WATER HEATER WEBASTO-PUMP
R84	16	24V	561707	RR JCT BOX	AUX. A/C RAD. FAN CLUTCH CTRL
R86	21	24V	561707	FR SERVICE CPT	KNEELING SYSTEM
R87	21	24V	561707	FR SERVICE CPT	KNEELING SYSTEM
R88	21	24V	561707	FR SERVICE CPT	KNEELING SYSTEM
R91	30	24V	561707	FR JCT PANEL	VIDEO SYSTEM & TV RECEIVER
R99	9	24V	561707	RR JCT BOX	RADIATOR FAN CLUTCH
RF1	9	24V	561707	RR JCT BOX	FAN CLUTCH W. A/C OR RET.SP•1
RF2	9	24V	561707	RR JCT BOX	FAN CLUTCH W. A/C OR RET.SP•2
RF3	9	24V	560772	RR JCT BOX	TIME DELAY

NO.	PAGE	COIL V	•PREVOST	LOCATION	FUNCTION
R1	2	24V	561991	FR JCT PANEL	ENGINE RUN (24) FR
R2	2	24V	561991	FR JCT PANEL	ENGINE RUN (12) FR
R3	1	24V	561707	BAT.JCT.PANEL	FIELD RELAY
R4	1	24V	561005	RR JCT BOX	STARTING MOTOR
R9	8	24V	561707	RR JCT BOX	BACK-UP LTS
R12	5	12V	562092	FR JCT PANEL	ELECTRICAL HORNS
R13	6	24V	561707	FR JCT PANEL	FOG LTS
R14	6	24V	561707	FR JCT PANEL	NIGHT'S BLINKER
R15	6	24V	561707	FR JCT PANEL	FR MARKER LTS
R16	6	24V	561707	FR JCT PANEL	IDENT. & CLEARANCE LTS
R17	6	24V	561707	RR JCT BOX	TAIL.LICENCE.MARKER-RR LTS
R18	6	24V	561707	FR JCT PANEL	DAYTIME RUN LTS-CANCEL
R19	6	24V	561707	FR JCT PANEL	HI-BEAM
R20	6	24V	561707	FR JCT PANEL	LO-BEAM
R22	3	24V	561707	FR SERV JCT BOX	DDEC III FAST IDLE SIGNAL
R23	3	24V	561707	RR JCT BOX	DDEC III 12V IGNITION
R24	4	24V	561707	BAT JCT PANEL	WORLD TRANSMISSION 12V IGN.
R25	3	24V	561707	FR SERV JCT BOX	BRAKE SW-DDEC CRUISE CTR
R26	8	24V	561707	RR JCT BOX	STOP LTS
R27	27	24V	560407	GALLEY	GALLEY CHARGER
R28	27	24V	561014	GALLEY	GALLEY CHARGER
R29	15	24V	561005	A/C JCT. BOX	A/C CONDENSER FAN
R30	15	24V	561005	A/C JCT. BOX	A/C EVAPORATOR FAN
R31	15	24V	561707	BAT JCT PANEL	A/C WATER PUMP
R32	1	24V	561991	BAT JCT PANEL	12V RR CUT-IN RLY
R33	15	12V	561538	FR JCT PANEL	A/C BLOWER CUT-IN
R34	15	24V	561707	RR JCT BOX	A/C WARNING LT
R35	15	24V	561707	FR JCT BOX	A/C WATER VALVE
R36	16	24V	561707	RR JCT BOX	AUX. A/C COMPRESSOR CLUTCH
R37	1	24V	561707	RR JCT BOX	GENERATOR-12VAC RLY SIGN
R38	16	24V	561707	RR JCT BOX	AUX. A/C FAN MOTOR
R39	13	24V	561707	RR JCT BOX	24V FLUORESCENT
R40	15	24V	561014	A/C JCT. BOX	A/C CONDENSER FAN
R41	15	24V	561005	A/C JCT. BOX	A/C CONDENSER FAN
R42	1	24V	561991	BAT JCT PANEL	12V FRONT CUT-IN RLY
R43	15	24V	561707	FR JCT BOX	WATER HEATER-BYPASS VALVE
R44	1	24V	561991	BAT JCT PANEL	12V FRONT CUT-IN RLY
R45	12	24V	561707	RR JCT BOX	READING LTS
R46	7	24V	561707	UNDER INST PANEL	LH DIRECTIONNAL LTS
R47	7	24V	561707	UNDER INST PANEL	RH DIRECTIONNAL LTS
R49	24	24V	561707	FR SERV JCT BOX	ABS - ENGINE BRAKE
R52	24	24V	561707	FR SERV JCT BOX	ABS - RETARDER
R53	2	24V	561991	RR JCT BOX	ENGINE RUN 24V RR
R54	2	24V	561991	RR JCT BOX	ENGINE RUN 12V RR
R57	6	24V	561707	FR JCT PANEL	DAY'S BLINKER
R60	6	12V	561538	FR JCT PANEL	DAYTIME RUN LTS
R62	7	24V	561707	BEHIND RH CONS	RH CORNERING
R63	7	24V	561707	BEHIND RH CONS	LH CORNERING
R66	29-30	24V	561707	SND SYS JCT PAN	VIDEO SYSTEM
R67	28	24V	561707	SND SYS JCT PAN	SOUND SYSTEM RADIO
R68	28	24V	561991	SND SYS JCT PAN	SOUND SYSTEM - 24V IGNITION
R69	22	12V	562092	FR JCT PANEL	LUGG DOOR LOCK
R70	22	12V	562092	FR JCT PANEL	LUGG DOOR UNLOCK
R71	22	12V	562092	FR JCT PANEL	LUGG DOOR LOCK TT LT
R72	11	24V	561707	FR JCT PANEL	DASH EMERGENCY AISLE-LTS

RELAYS CODE (R) PAGE I : 1

NO.	PAGE	COIL V	•PREVOST	LOCATION	FUNCTION
R73	28-29	24V	561557	FR JCT PANEL	SOUND SYSTEM PRIOR REV. 008
R74	22	12V	562092	RR JCT BOX	LUGG DOOR LOCK
R75	22	12V	562092	RR JCT BOX	LUGG DOOR UNLOCK
R76	8	24V	561707	RR JCT BOX	STOP LTS-ENG. BRK & RET. SYST.
R77	7	12V	562092	UNDER DASH	AUDIBLE FLASHER RLY
R78	5	24V	561707	RR JCT BOX	DDEC3 FAN CONTROL SPEED•1
R79	5	24V	561707	RR JCT BOX	DDEC3 FAN CONTROL SPEED•2
R80	23	24V	561707	FR SERV JCT BOX	ENGINE BRAKE SYSTEM-WT CONTROL
R82	23	24V	561707	FR SERV JCT BOX	RETARDER SYSTEM
R83	17	24V	561707	RR JCT BOX	WATER HEATER WEBASTO-PUMP
R84	16	24V	561707	RR JCT BOX	AUX. A/C RAD. FAN CLUTCH CTRL
R86	21	24V	561707	FR SERVICE CPT	KNEELING SYSTEM
R87	21	24V	561707	FR SERVICE CPT	KNEELING SYSTEM
R88	21	24V	561707	FR SERVICE CPT	KNEELING SYSTEM
R91	30	24V	561707	FR JCT PANEL	VIDEO SYSTEM & TV RECEIVER
R99	9	24V	561707	RR JCT BOX	RADIATOR FAN CLUTCH
RF1	9	24V	561707	RR JCT BOX	FAN CLUTCH W. A/C OR RET.SP•1
RF2	9	24V	561707	RR JCT BOX	FAN CLUTCH W. A/C OR RET.SP•2
RF3	9	24V	560772	RR JCT BOX	TIME DELAY

NO.	PAGE	COIL V	•PREVOST	LOCATION	FUNCTION
R1	2	24V	561991	FR JCT PANEL	ENGINE RUN (24) FR
R2	2	24V	561991	FR JCT PANEL	ENGINE RUN (12) FR
R3	1	24V	561707	BAT.JCT.PANEL	FIELD RELAY
R4	1	24V	561005	RR JCT BOX	STARTING MOTOR
R9	8	24V	561707	RR JCT BOX	BACK-UP LTS
R12	5	12V	562092	FR JCT PANEL	ELECTRICAL HORNS
R13	6	24V	561707	FR JCT PANEL	FOG LTS
R14	6	24V	561707	FR JCT PANEL	NIGHT'S BLINKER
R15	6	24V	561707	FR JCT PANEL	FR MARKER LTS
R16	6	24V	561707	FR JCT PANEL	IDENT. & CLEARANCE LTS
R17	6	24V	561707	RR JCT BOX	TAIL.LICENCE.MARKER-RR LTS
R18	6	24V	561707	FR JCT PANEL	DAYTIME RUN LTS-CANCEL
R19	6	24V	561707	FR JCT PANEL	HI-BEAM
R20	6	24V	561707	FR JCT PANEL	LO-BEAM
R22	3	24V	561707	FR SERV JCT BOX	DDEC III FAST IDLE SIGNAL
R23	3	24V	561707	RR JCT BOX	DDEC III 12V IGNITION
R24	4	24V	561707	BAT JCT PANEL	WORLD TRANSMISSION 12V IGN.
R25	3	24V	561707	FR SERV JCT BOX	BRAKE SW-DDEC CRUISE CTR
R26	8	24V	561707	RR JCT BOX	STOP LTS
R27	27	24V	560407	GALLEY	GALLEY CHARGER
R28	27	24V	561014	GALLEY	GALLEY CHARGER
R29	15	24V	561005	A/C JCT. BOX	A/C CONDENSER FAN
R30	15	24V	561005	A/C JCT. BOX	A/C EVAPORATOR FAN
R31	15	24V	561707	BAT JCT PANEL	A/C WATER PUMP
R32	1	24V	561991	BAT JCT PANEL	12V RR CUT-IN RLY
R33	15	12V	561538	FR JCT PANEL	A/C BLOWER CUT-IN
R34	15	24V	561707	RR JCT BOX	A/C WARNING LT
R35	15	24V	561707	FR JCT BOX	A/C WATER VALVE
R36	16	24V	561707	RR JCT BOX	AUX. A/C COMPRESSOR CLUTCH
R37	1	24V	561707	RR JCT BOX	GENERATOR-12VAC RLY SIGN
R38	16	24V	561707	RR JCT BOX	AUX. A/C FAN MOTOR
R39	13	24V	561707	RR JCT BOX	24V FLUORESCENT
R40	15	24V	561014	A/C JCT. BOX	A/C CONDENSER FAN
R41	15	24V	561005	A/C JCT. BOX	A/C CONDENSER FAN
R42	1	24V	561991	BAT JCT PANEL	12V FRONT CUT-IN RLY
R43	15	24V	561707	FR JCT BOX	WATER HEATER-BYPASS VALVE
R44	1	24V	561991	BAT JCT PANEL	12V FRONT CUT-IN RLY
R45	12	24V	561707	RR JCT BOX	READING LTS
R46	7	24V	561707	UNDER INST PANEL	LH DIRECTIONNAL LTS
R47	7	24V	561707	UNDER INST PANEL	RH DIRECTIONNAL LTS
R49	24	24V	561707	FR SERV JCT BOX	ABS - ENGINE BRAKE
R52	24	24V	561707	FR SERV JCT BOX	ABS SYSTEM
R53	2	24V	561991	RR JCT BOX	ENGINE RUN 24V RR
R54	2	24V	561991	RR JCT BOX	ENGINE RUN 12V RR
R57	6	24V	561707	FR JCT PANEL	DAY'S BLINKER
R60	6	12V	561538	FR JCT PANEL	DAYTIME RUN LTS
R62	7	24V	561707	BEHIND RH CONS	RH CORNERING
R63	7	24V	561707	BEHIND RH CONS	LH CORNERING
R66	29-30	24V	561707	SND SYS JCT PAN	VIDEO SYSTEM
R67	28	24V	561707	SND SYS JCT PAN	SOUND SYSTEM RADIO
R68	28	24V	561991	SND SYS JCT PAN	SOUND SYSTEM - 24V IGNITION
R69	22	12V	562092	FR JCT PANEL	LUGG DOOR LOCK
R70	22	12V	562092	FR JCT PANEL	LUGG DOOR UNLOCK
R71	22	12V	562092	FR JCT PANEL	LUGG DOOR LOCK TT LT
R72	11	24V	561707	FR JCT PANEL	DASH EMERGENCY AISLE-LTS

RELAYS CODE (R) PAGE I : 1

NO.	PAGE	COIL V	•PREVOST	LOCATION	FUNCTION
R73	28-29	24V	561557	FR JCT PANEL	SOUND SYSTEM PRIOR REV. 008
R74	22	12V	562092	RR JCT BOX	LUGG DOOR LOCK
R75	22	12V	562092	RR JCT BOX	LUGG DOOR UNLOCK
R76	8	24V	561707	RR JCT BOX	STOP LTS-ENG. BRK & RET. SYST.
R77	7	12V	562092	UNDER DASH	AUDIBLE FLASHER RLY
R78	5	24V	561707	RR JCT BOX	DDEC3 FAN CONTROL SPEED•1
R79	5	24V	561707	RR JCT BOX	DDEC3 FAN CONTROL SPEED•2
R80	23	24V	561707	FR SERV JCT BOX	ENGINE BRAKE SYSTEM-WT CONTROL
R82	23	24V	561707	FR SERV JCT BOX	RETARDER SYSTEM
R83	17	24V	561707	RR JCT BOX	WATER HEATER WEBASTO-PUMP
R84	16	24V	561707	RR JCT BOX	AUX. A/C RAD. FAN CLUTCH CTRL
R86	21	24V	561707	FR SERVICE CPT	KNEELING SYSTEM
R87	21	24V	561707	FR SERVICE CPT	KNEELING SYSTEM
R88	21	24V	561707	FR SERVICE CPT	KNEELING SYSTEM
R91	30	24V	561707	FR JCT PANEL	VIDEO SYSTEM & TV RECEIVER
R99	9	24V	561707	RR JCT BOX	RADIATOR FAN CLUTCH
RF1	9	24V	561707	RR JCT BOX	FAN CLUTCH W. A/C OR RET.SP•1
RF2	9	24V	561707	RR JCT BOX	FAN CLUTCH W. A/C OR RET.SP•2
RF3	9	24V	560772	RR JCT BOX	TIME DELAY

RESISTOR CODE (RS) Page J : 1

NO.	PAGE	OHM(S)	*PREVOST	LOCATION	FUNCTION
RS1	3	11 K	562307	FR SERV JCT BOX	DDEC III-FAST IDLE
RS2	3	3.6 K	562306	FR SERV JCT BOX	DDEC III-FAST IDLE
RS3	6	1 (2)	561537	FR SERV. COMPT.	FOG LT - RH
RS4	6	1 (2)	561537	FR SERV. COMPT.	FOG LT - LH
RS11	16	2	062289	REAR A/C AUX.	A./C AUXILIARY
RS12	16	2	062289	REAR A/C AUX.	A./C AUXILIARY
RS13	16	470 K	061962	RR JCT BOX	AUX. A/C TD COMPR. CLUTCH
RS14	6	.82 (2)	060806	FR SERV. COMPT.	DAYTIME RUN LTS
RS15	12	33	063073	RR JCT BOX	COMPR CLUTCH TIME DELAY ON
RS16	31	80	562108	FRONT TOP	FR. DESTINATION SIGN
RS17	5	220	562498	UNDER DASH	FIRE ALARM

RESISTOR CODE (RS) Page J : 1

NO.	PAGE	OHM(S)	*PREVOST	LOCATION	FUNCTION

RESISTOR CODE (RS)

Page J : 1

NO.	PAGE	OHM(S)	*PREVOST	LOCATION	FUNCTION
RS1	3	11 K	562307	FR SERV JCT BOX	DDEC III-FAST IDLE
RS2	3	3.6 K	562306	FR SERV JCT BOX	DDEC III-FAST IDLE
RS3	6	1 (2)	561537	FR SERV. COMPT.	FOG LT - RH
RS4	6	1 (2)	561537	FR SERV. COMPT.	FOG LT - LH
RS11	16	2	062289	REAR A/C AUX.	A./C AUXILIARY
RS12	16	2	062289	REAR A/C AUX.	A./C AUXILIARY
RS13	16	470 K	061962	RR JCT BOX	AUX. A/C TD COMPR. CLUTCH
RS14	6	.82 (2)	060806	FR SERV. COMPT.	DAYTIME RUN LTS
RS15	12	33	063073	RR JCT BOX	COMPR CLUTCH TIME DELAY ON
RS16	31	80	562108	FRONT TOP	FR. DESTINATION SIGN
RS17	5	220	562498	UNDER DASH	FIRE ALARM
RS18	9	75 K	064208	RR JCT BOX	RAD. FAN CLUTCH W.A/C OR RETARD.

RESISTOR CODE (RS)

Page J : 1

NO. PAGE OHM(S) *PREVOST LOCATION FUNCTION

NO.	PAGE	OHM(S)	•PREVOST	LOCATION	FUNCTION
RS1	3	11 K	562307	FR SERV JCT BOX	DDEC III-FAST IDLE
RS2	3	3.6 K	562306	FR SERV JCT BOX	DDEC III-FAST IDLE
RS3	6	1 (2)	561537	FR SERV. COMPT.	FOG LT - RH
RS4	6	1 (2)	561537	FR SERV. COMPT.	FOG LT - LH
RS11	16	2	062289	REAR A/C AUX.	A./C AUXILIARY
RS12	16	2	062289	REAR A/C AUX.	A./C AUXILIARY
RS13	16	470 K	061962	RR JCT BOX	AUX. A/C TD COMPR. CLUTCH
RS14	6	.82 (2)	060806	FR SERV. COMPT.	DAYTIME RUN LTS
RS15	12	33	063073	RR JCT BOX	COMPR CLUTCH TIME DELAY ON
RS16	31	80	562108	FRONT TOP	FR. DESTINATION SIGN
RS17	5	220	562498	UNDER DASH	FIRE ALARM
RS18	9	75 K	064208	RR JCT BOX	RAD. FAN CLUTCH W.A/C OR RETARD.
RS36	15	10	064907	COND. COMPT.	CURRENT LIMITER FOR RELAY
RS37	15	5	064907	COND. COMPT.	CURRENT LIMITER FOR RELAY

RESISTOR CODE (RS) PAGE J : 1

NO.	PAGE	OHM(S)	•PREVOST	LOCATION	FUNCTION

WIRING DIAGRAM KEYS

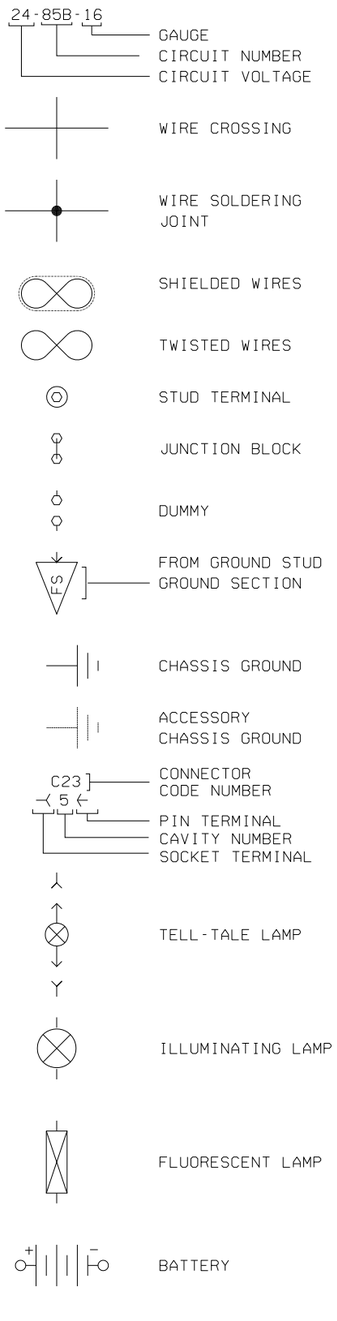

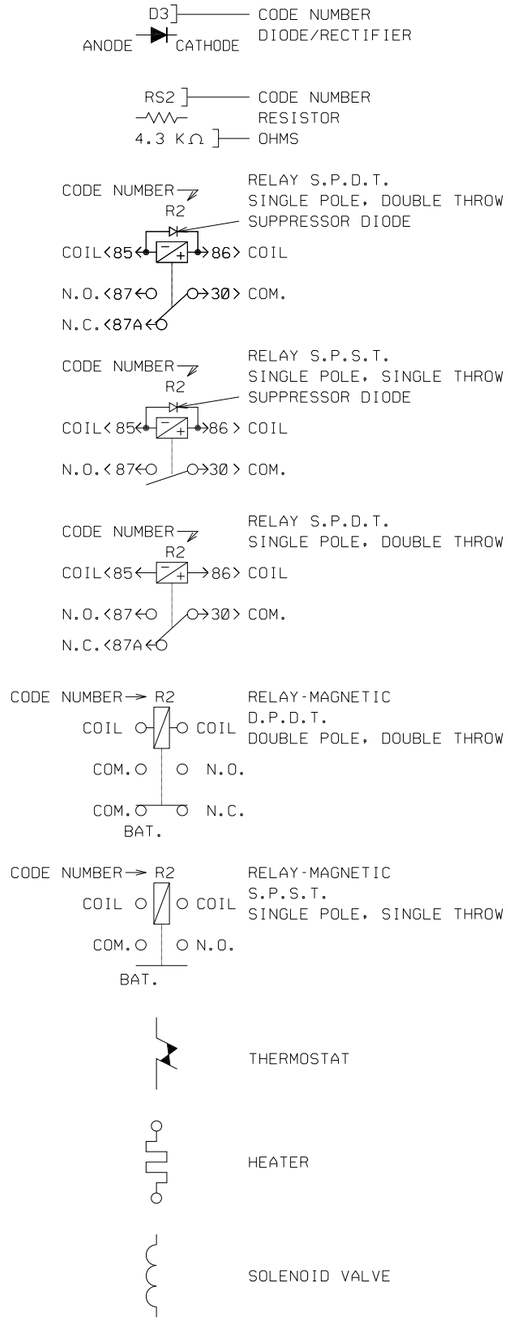

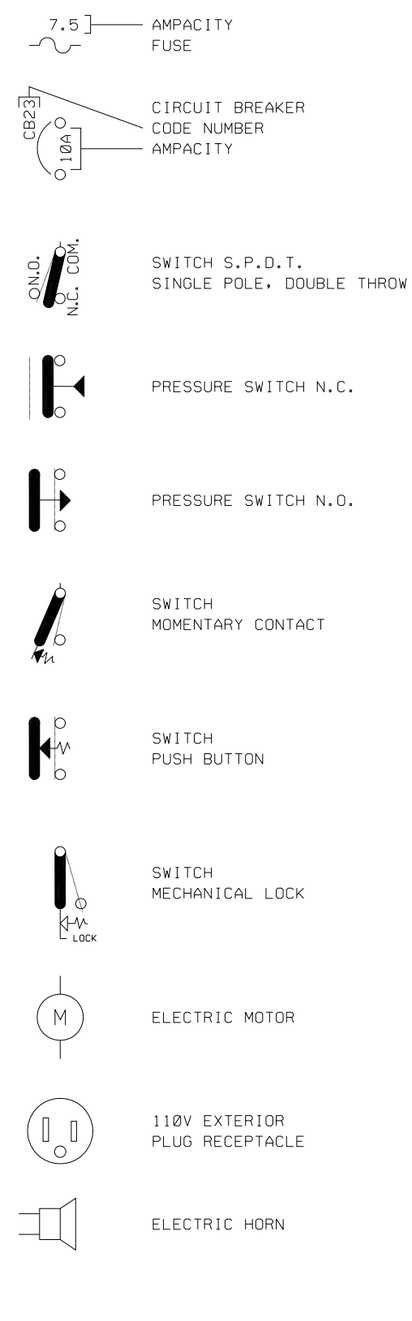

BLK	BLACK
YEL	YELLOW
RED	RED
WH	WHITE
GRY	GREY
ORA	ORANGE
BLU	BLUE
GRN	GREEN
BRN	BROWN
PUR	PURPLE
PK	PINK

RR. JCT BOX - JUNCTION BLOCK

FR. JCT PANEL - JUNCTION BLOCK

BATT.CPT - JUNCTION BLOCK

PREVOST CAR inc.	WIRING DIAGRAM	NO: D060871	P.K	REVISION 000

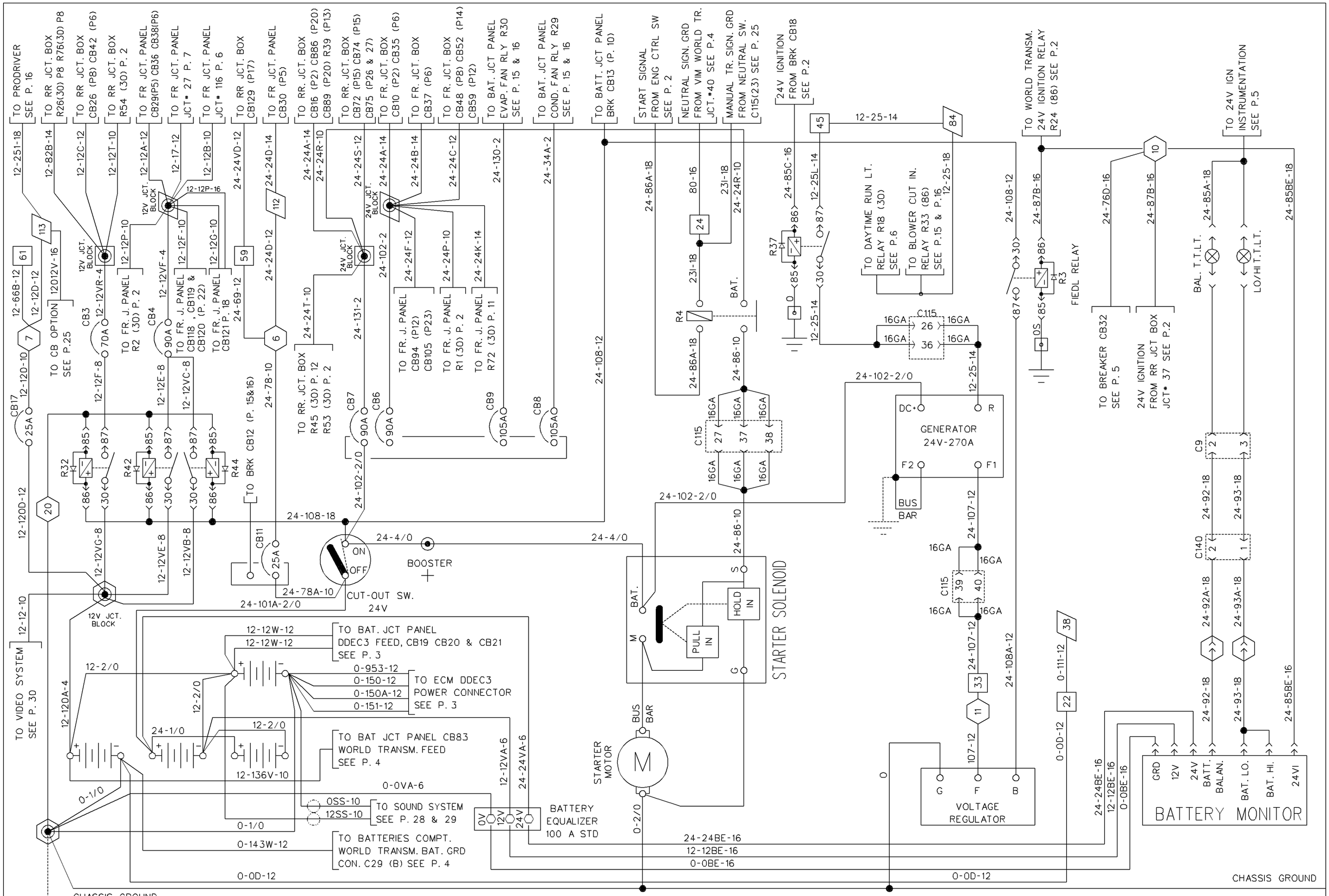

CHARGING SYSTEM

PREVOST CAR inc.	WIRING DIAGRAM	NO: D060871	P. 1	REVISION 001

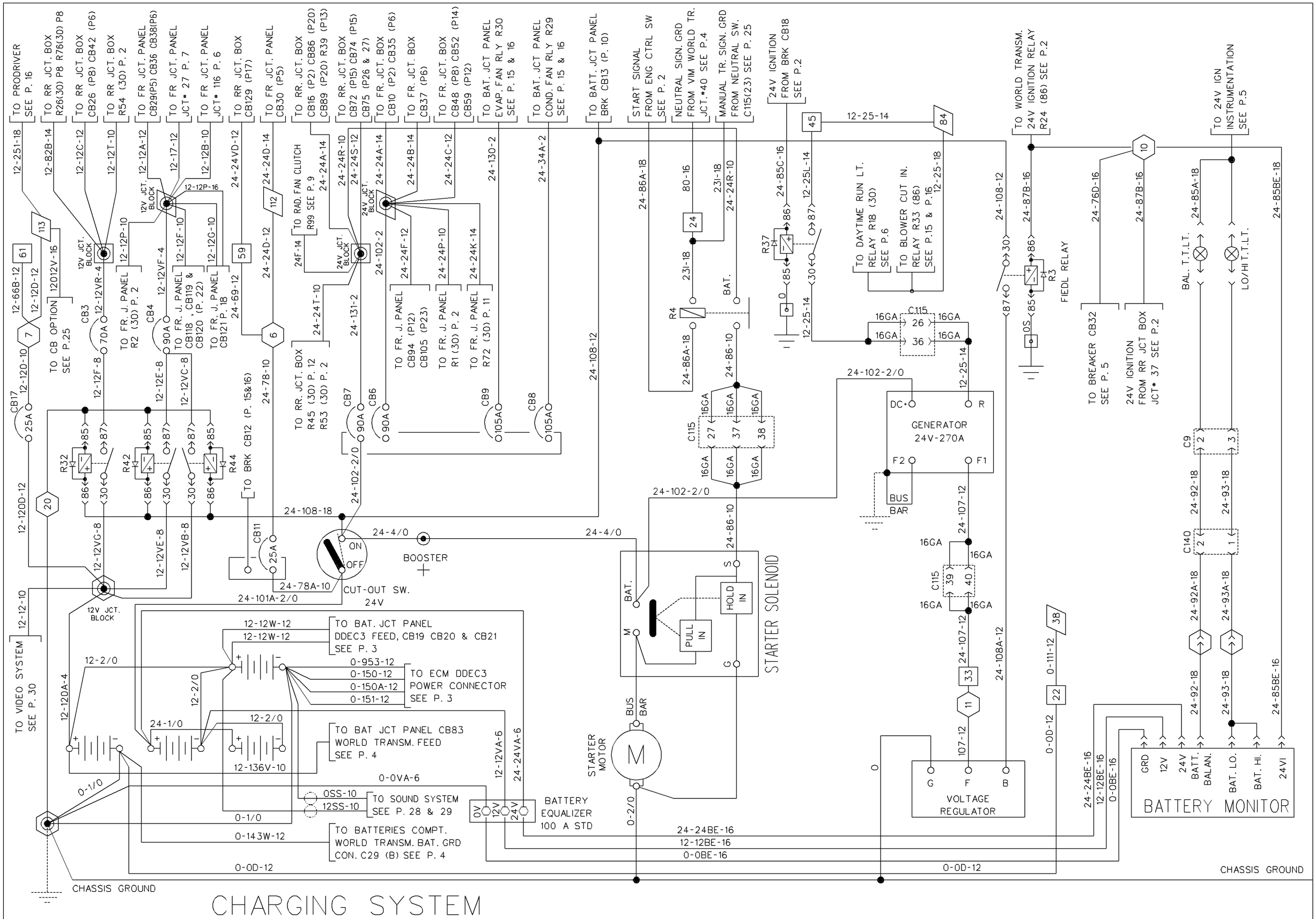

CHARGING SYSTEM

PREVOST CAR inc.	WIRING DIAGRAM	NO: D060871	P. 1	REVISION 006

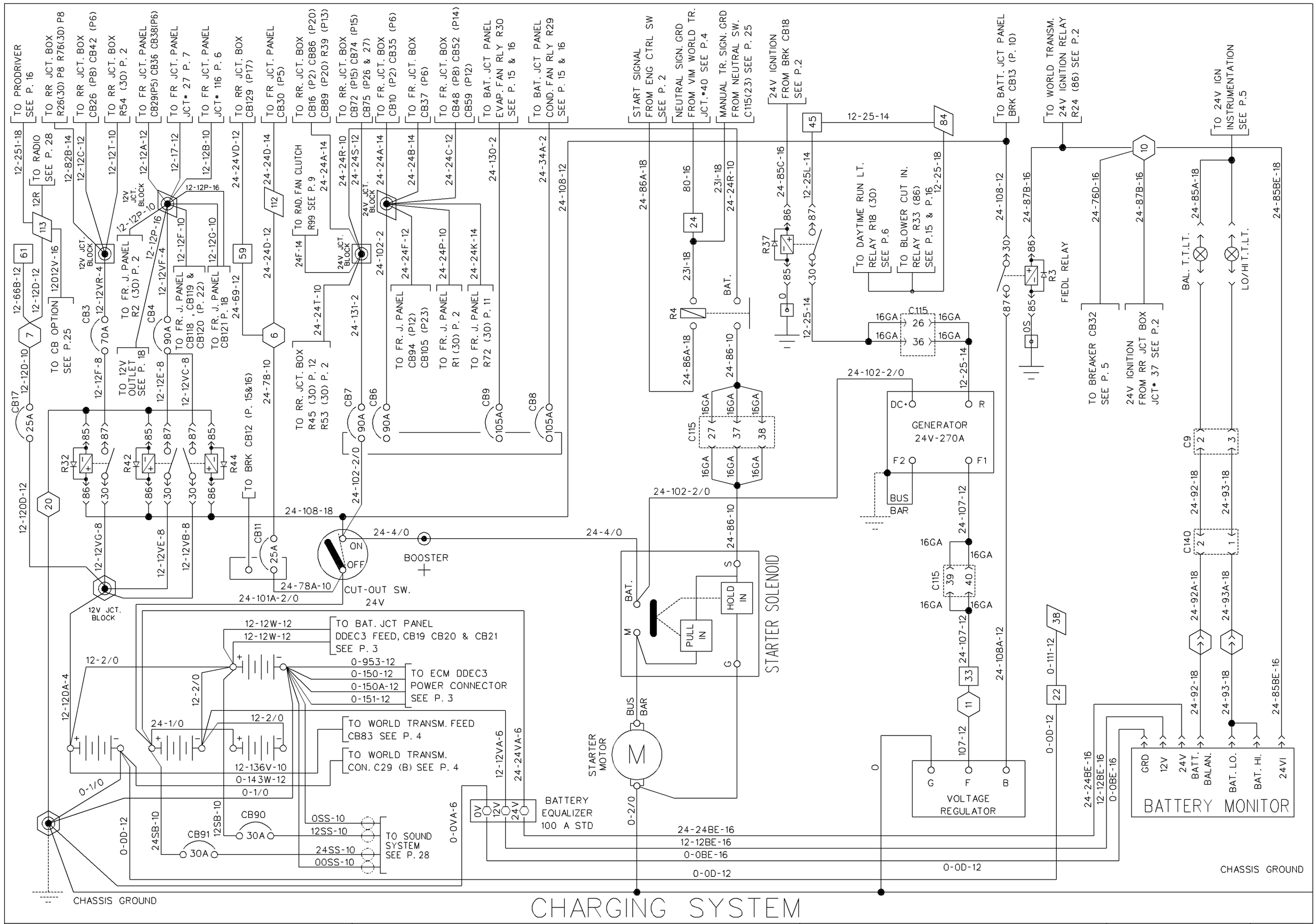

CHARGING SYSTEM

PREVOST CAR inc.	WIRING DIAGRAM	NO: D060871	P. 1	REVISION 008

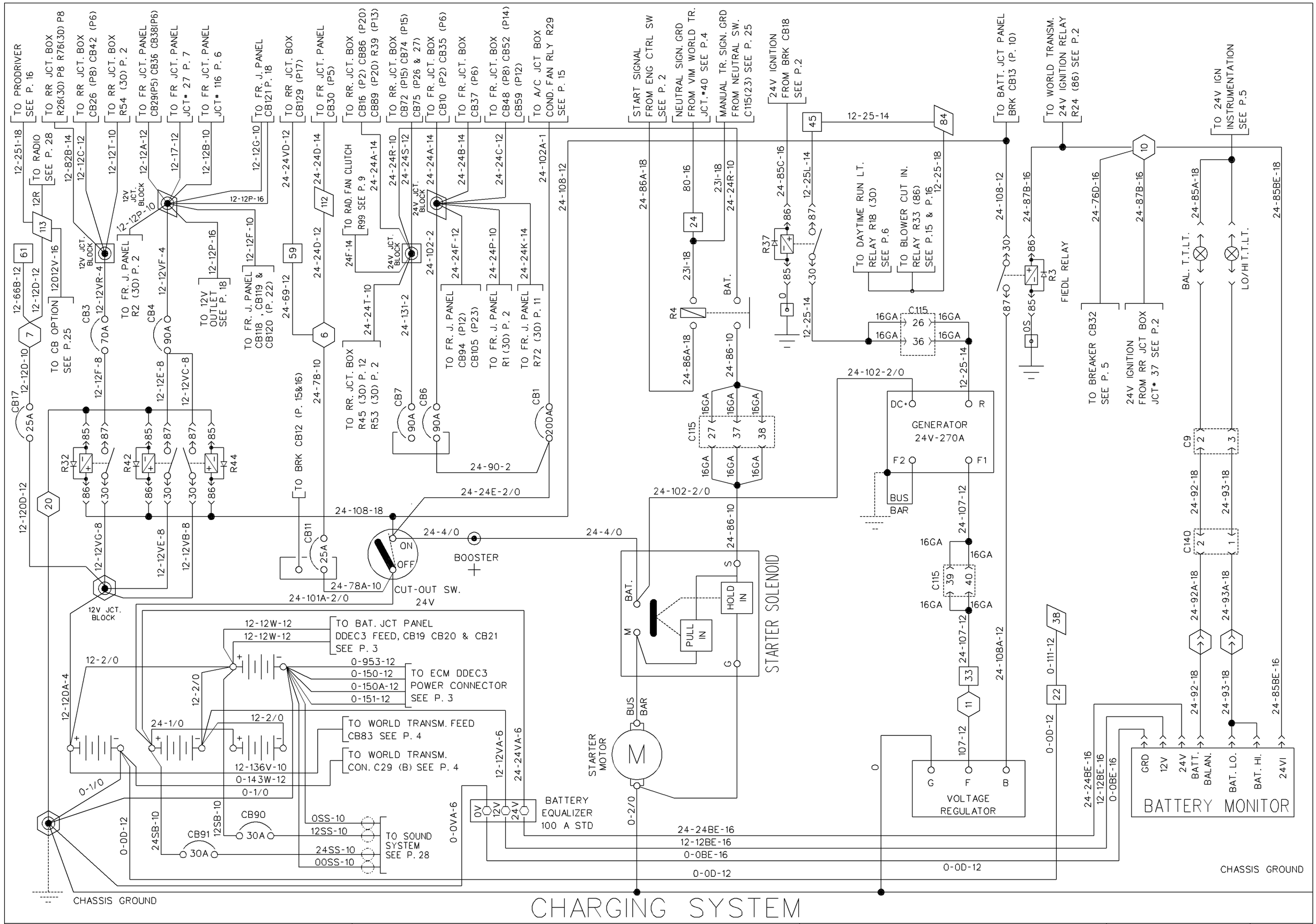

CHARGING SYSTEM

PREVOST CAR inc.	WIRING DIAGRAM	NO: D060871	P. 1	REVISION 014

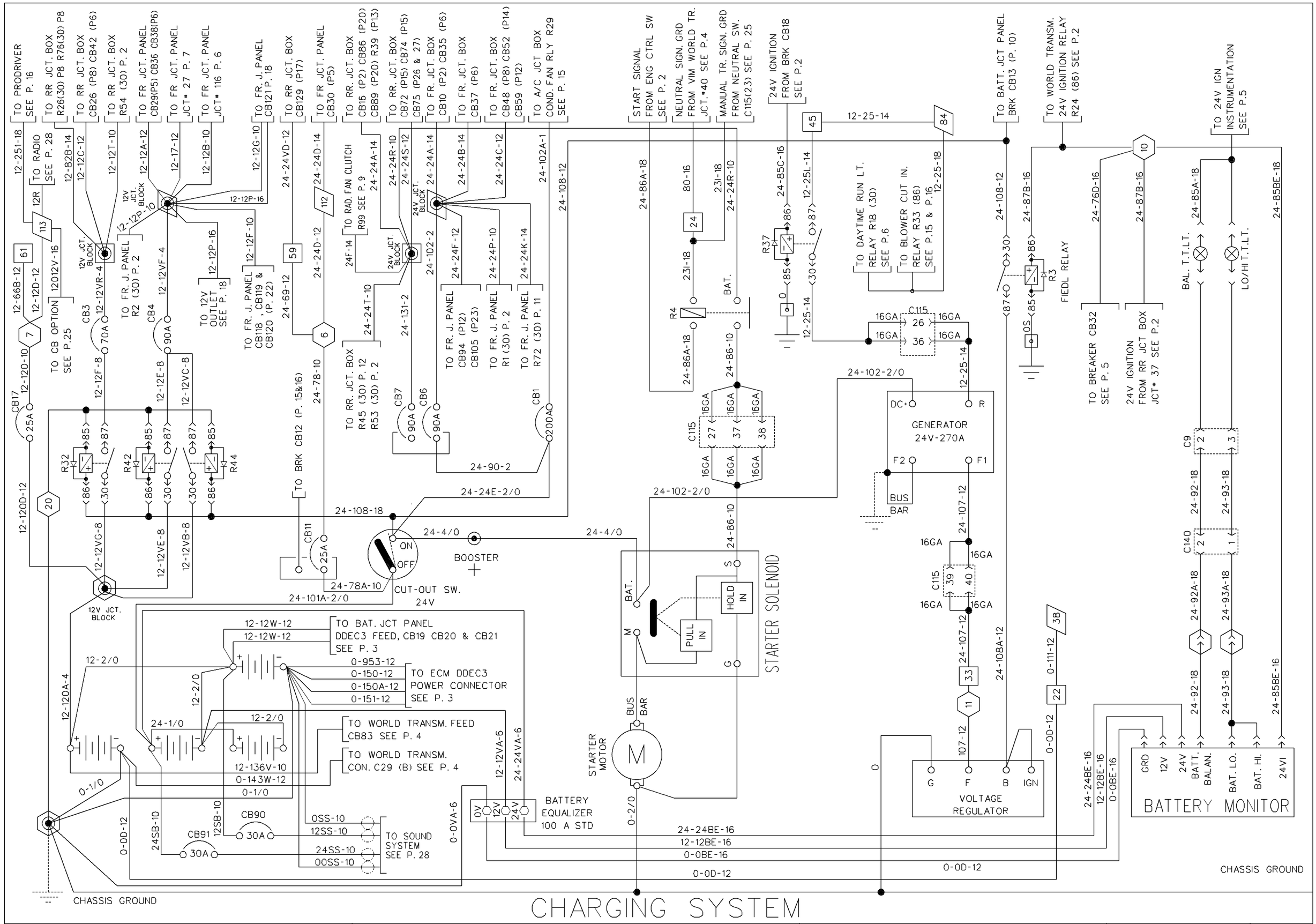

CHARGING SYSTEM

PREVOST CAR inc.	WIRING DIAGRAM	NO: D060871	P. 1	REVISION 017

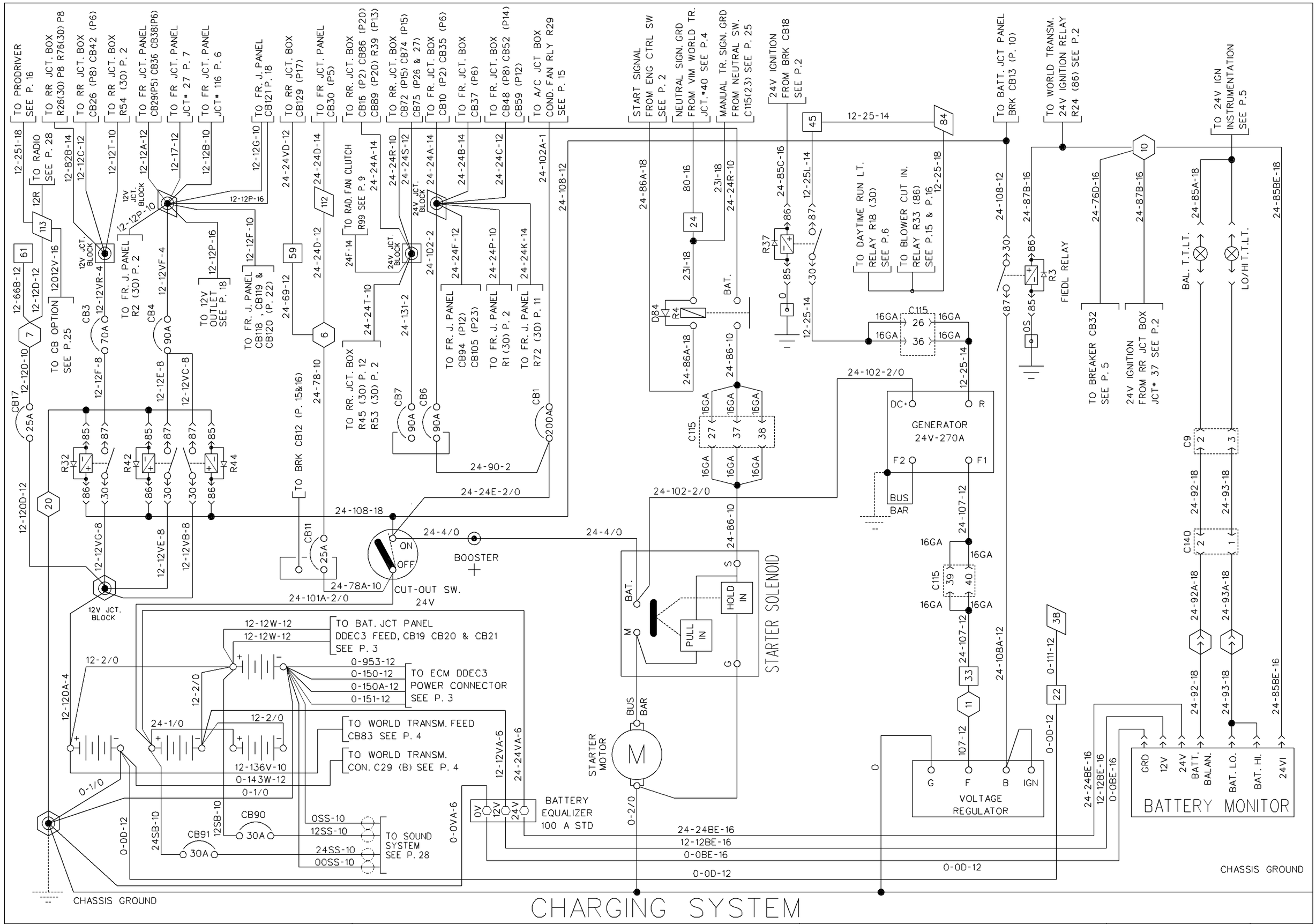

CHARGING SYSTEM

PREVOST CAR inc.	WIRING DIAGRAM	NO: D060871	P. 1	REVISION 022

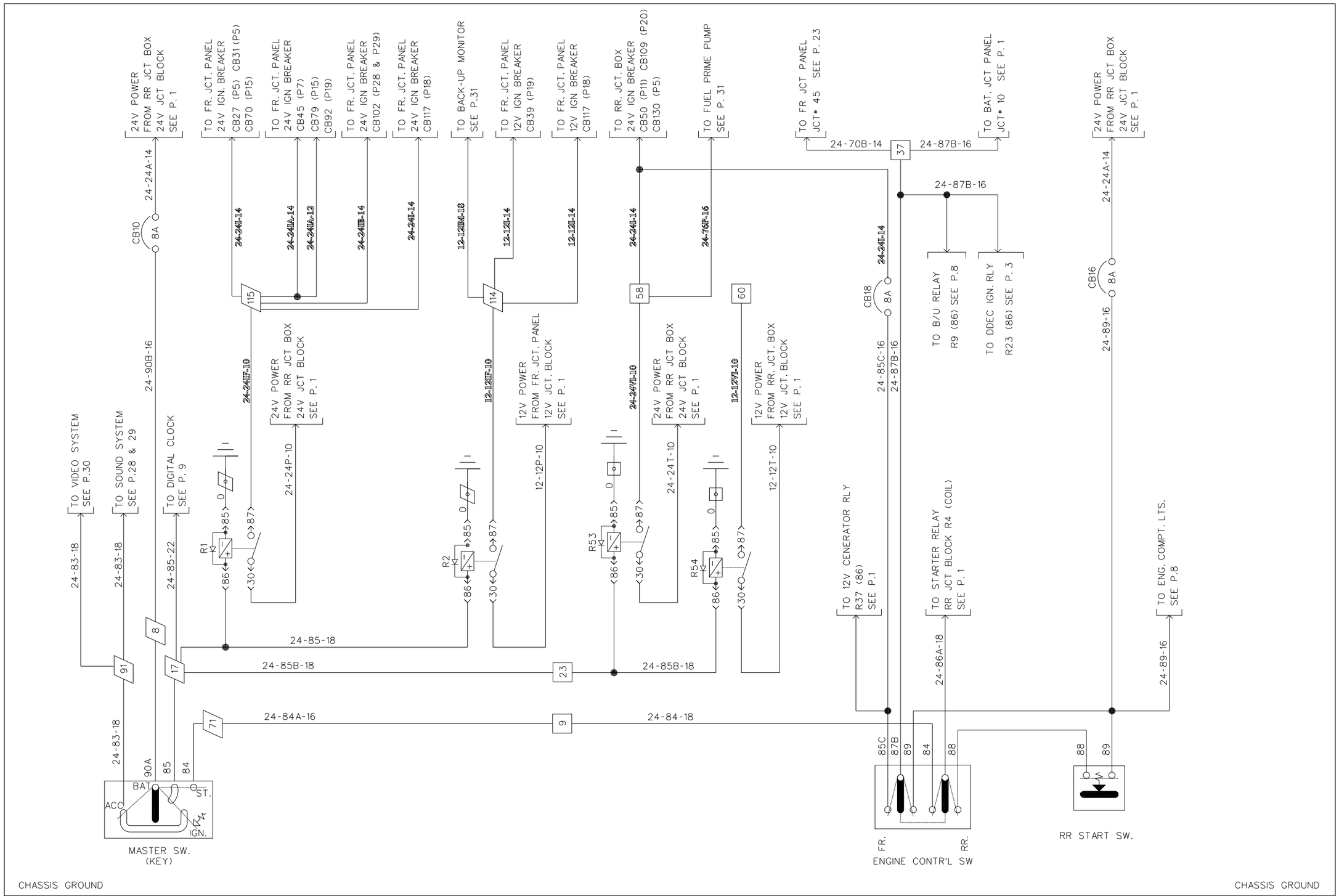

ENGINE CONTROL

PREVOST CAR inc.	WIRING DIAGRAM	NO: D060871	P. 2 PRIOR	REVISION 000

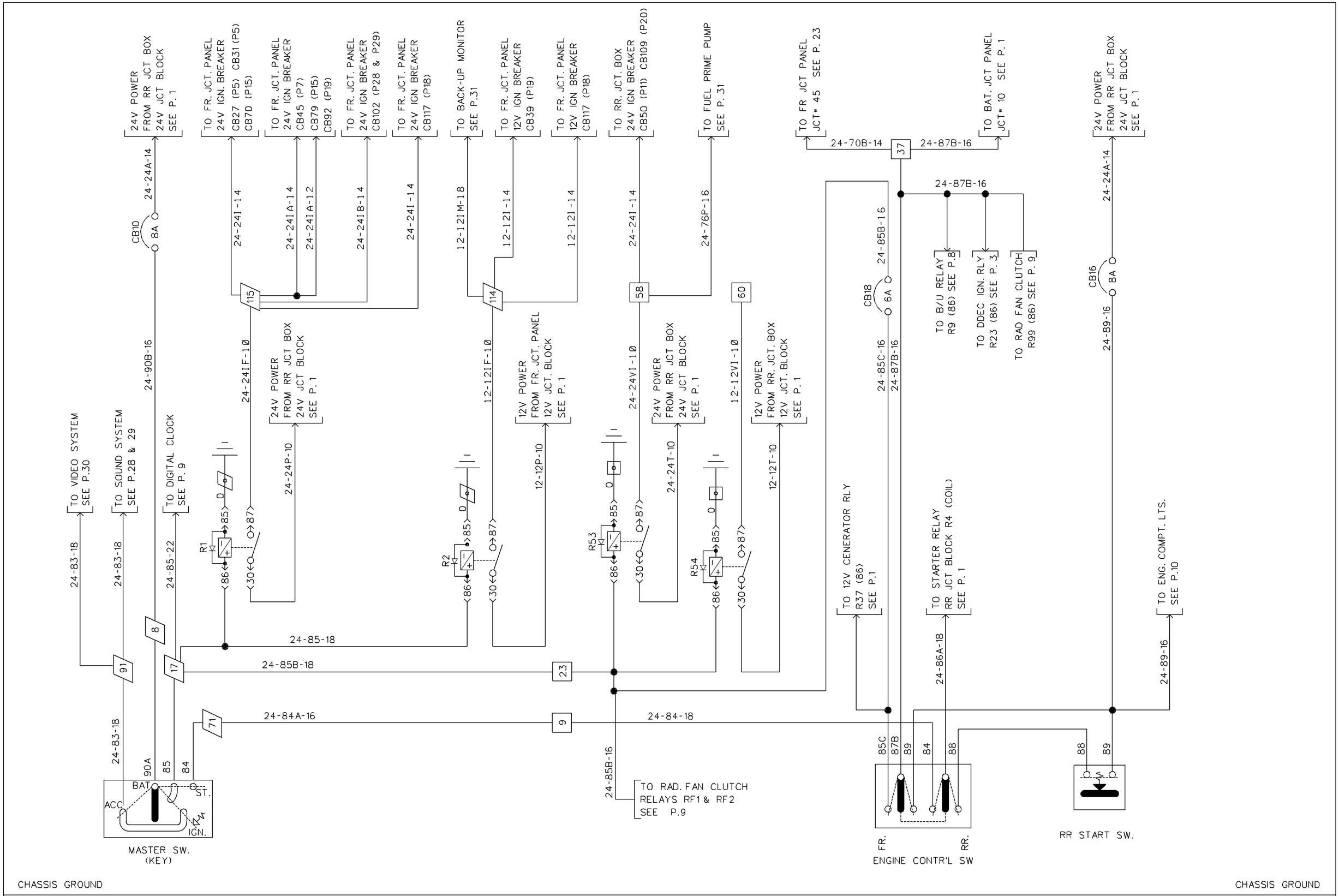

ENGINE CONTROL

PREVOST CAR inc.	WIRING DIAGRAM	NO: D060871	P. 2	REVISION 006

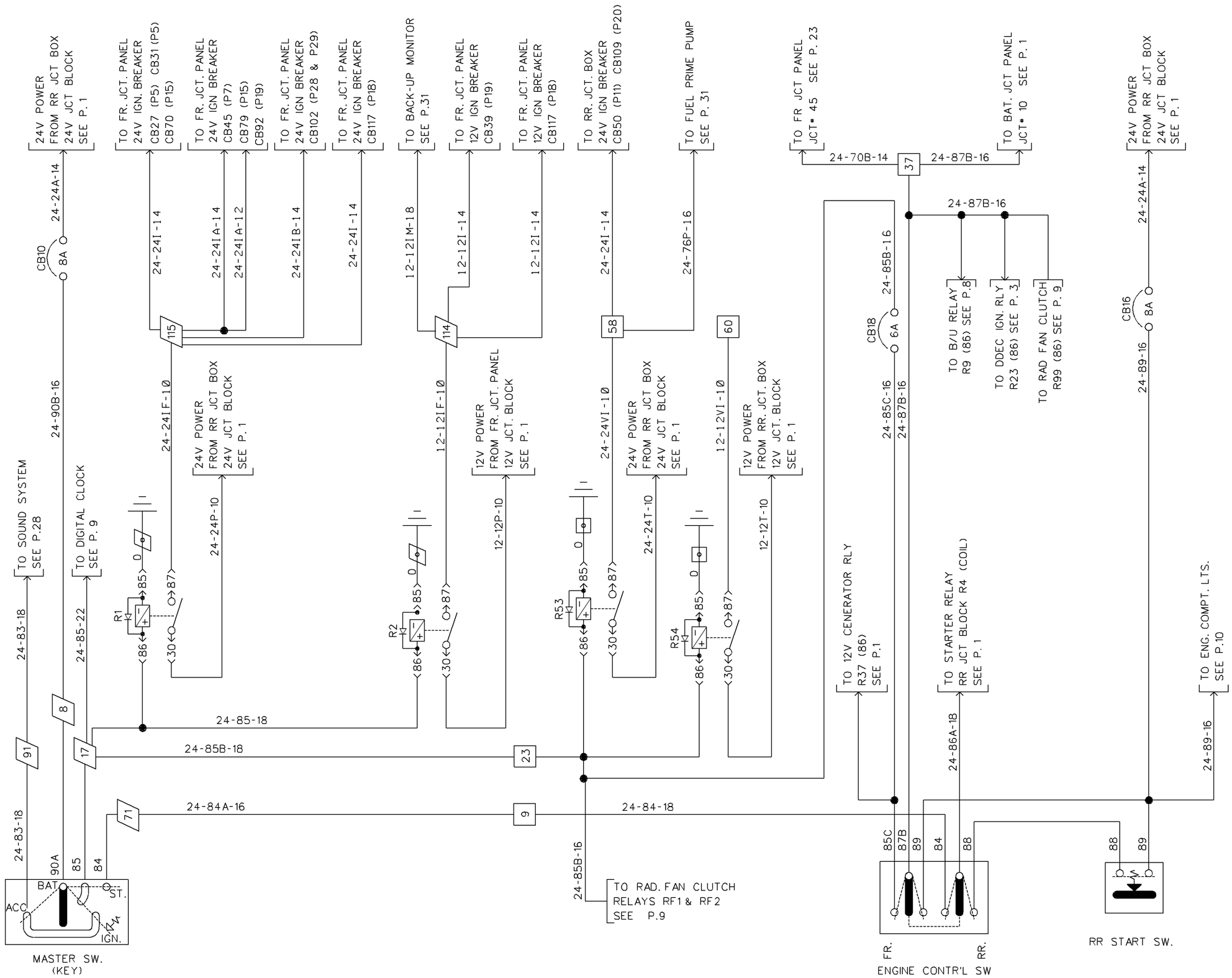

ENGINE CONTROL

PREVOST CAR inc.	WIRING DIAGRAM	NO: D060871	P. 2	REVISION 008

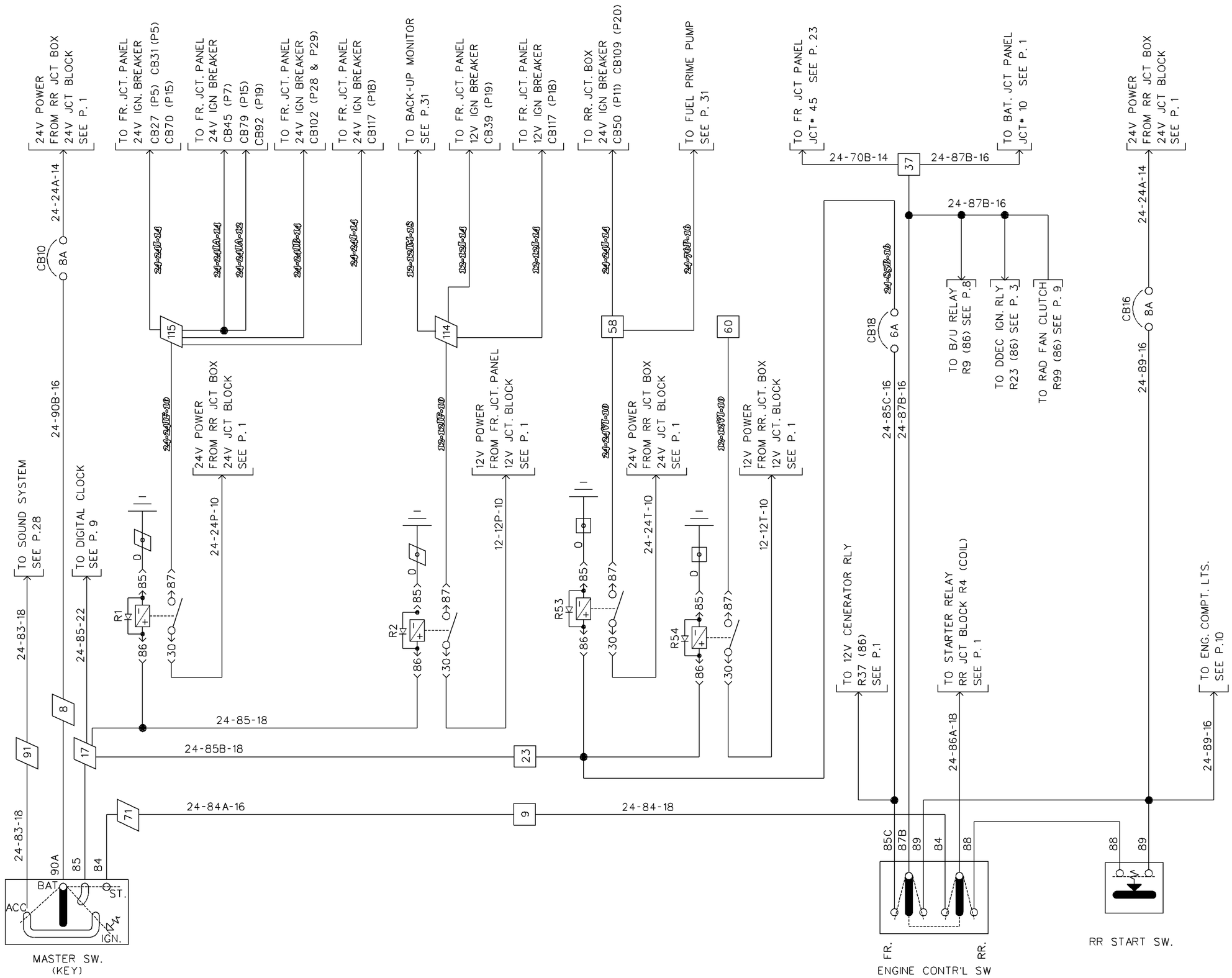

ENGINE CONTROL

PREVOST CAR inc.	WIRING DIAGRAM	NO: D060871	P. 2	REVISION 022

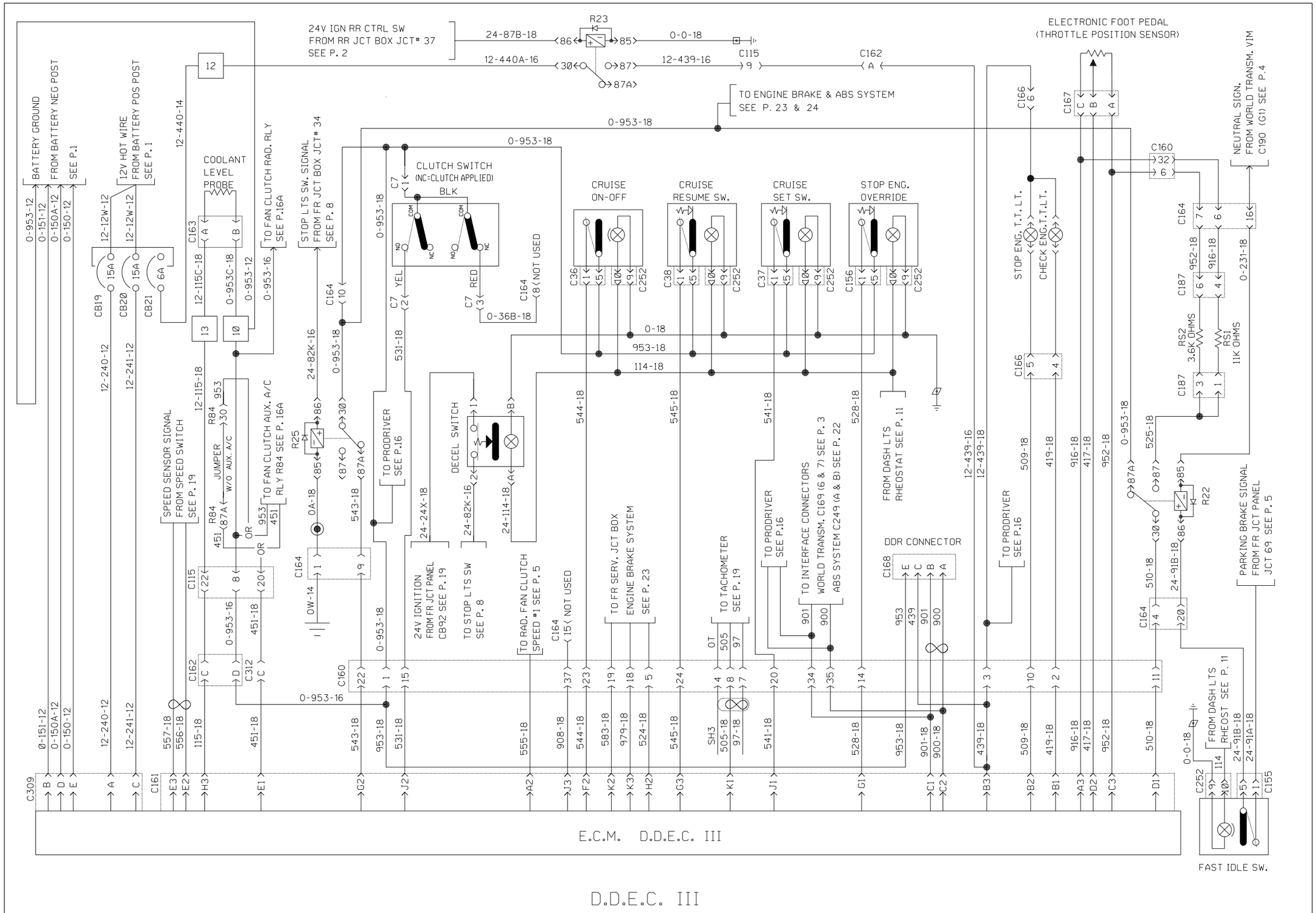

D.D.E.C. III

PREVOST CAR inc.	WIRING DIAGRAM	NO: D060871	P. 3	REVISION 000

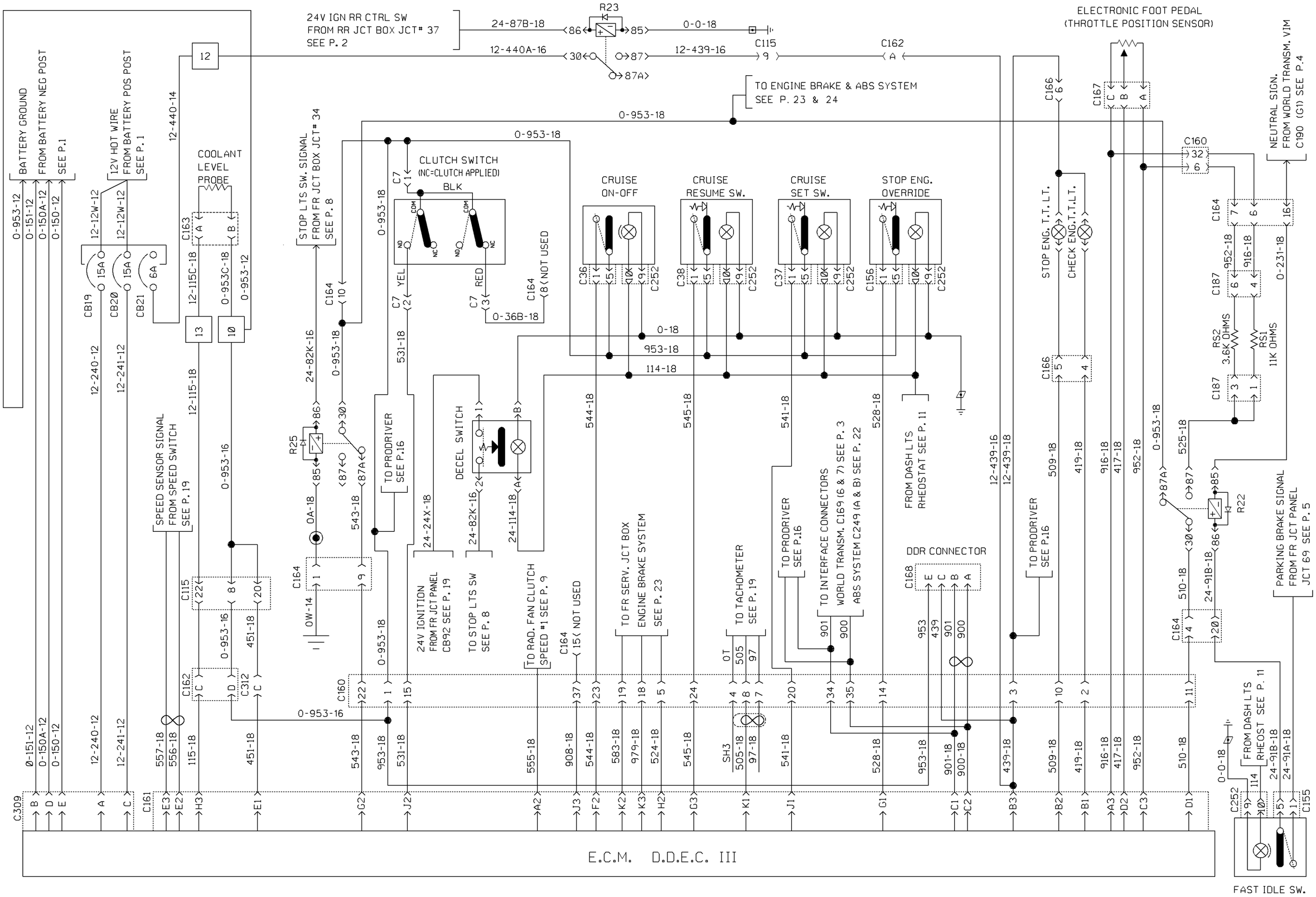

D.D.E.C. III

PREVOST CAR inc.	WIRING DIAGRAM	NO: D060871	P. 3	REVISION 006

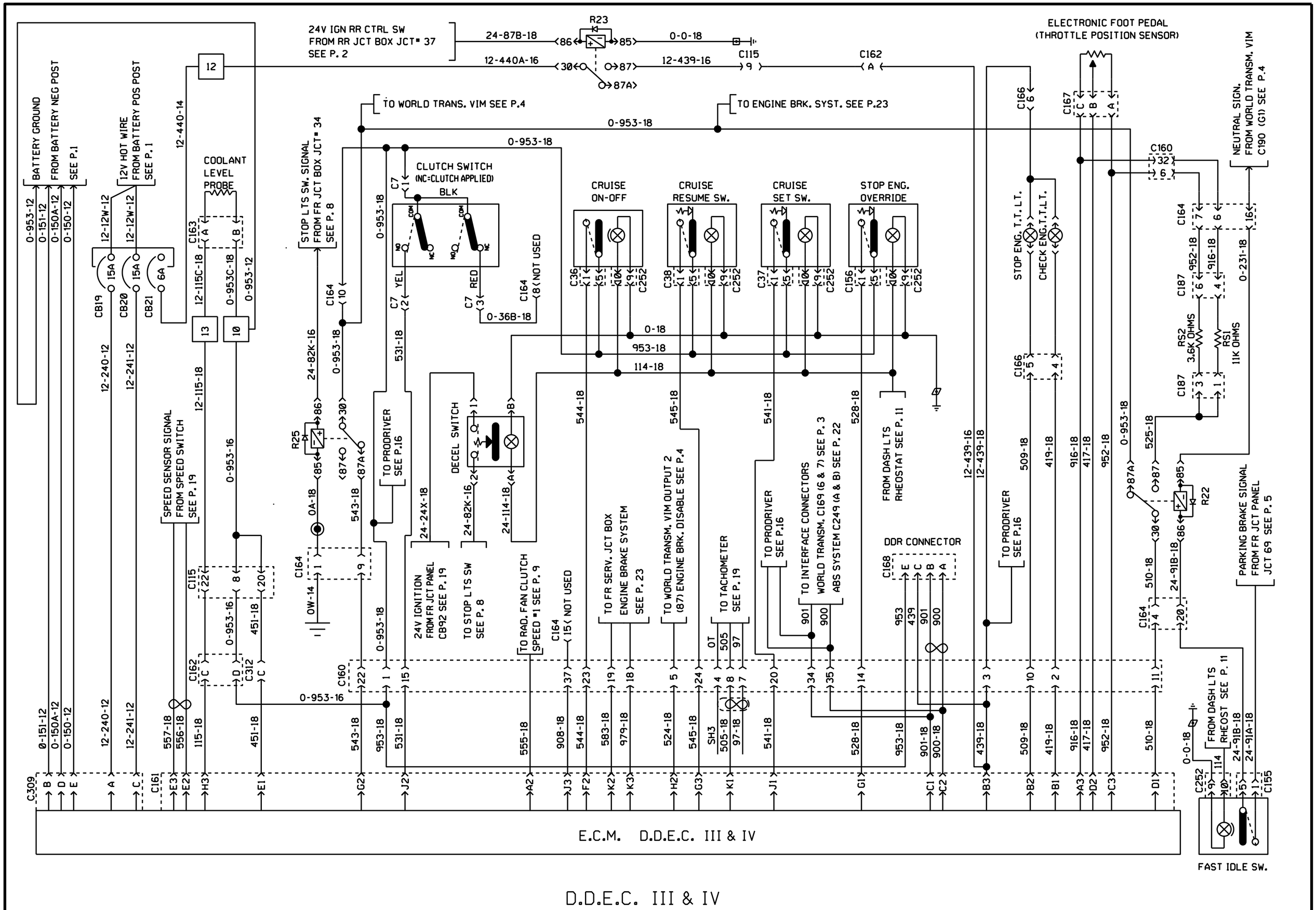
24V IGN RR CTRL SW
FROM RR JCT BOX JCT# 37
SEE P. 2
R23
24-87B-18
0-0-18
12-440A-16
12-439-16
C115
C162
ELECTRONIC FOOT PEDAL
(THROTTLE POSITION SENSOR)
BATTERY GROUND
FROM BATTERY NEG POST
SEE P.1
12V HOT WIRE
FROM BATTERY POS POST
SEE P. 1
12-440-14
COOLANT
LEVEL
PROBE
TO WORLD TRANS. VIM SEE P.4
TO ENGINE BRK. SYST. SEE P.23
0-953-18
STOP LTS SW. SIGNAL
FROM FR JCT BOX JCT# 34
SEE P. 8
CLUTCH SWITCH
(NC=CLUTCH APPLIED)
BLK
YEL
RED
0-36B-18
NOT USED
CRUISE
ON-OFF
CRUISE
RESUME SW.
CRUISE
SET SW.
STOP ENG.
OVERRIDE
NEUTRAL SIGN.
FROM WORLD TRANSM. VIM
C190 (G1) SEE P.4
STOP ENG. T.T. LT.
CHECK ENG.T.T.LT.
RS2
3.6K OHMS
RS1
11K OHMS
0-18
953-18
114-18
544-18
545-18
541-18
528-18
SPEED SENSOR SIGNAL
FROM SPEED SWITCH
SEE P. 19
TO PRODRIVER
SEE P.16
DECEL SWITCH
TO WORLD TRANSM. VIM OUTPUT 2
(87) ENGINE BRK. DISABLE SEE P.4
TO INTERFACE CONNECTORS
WORLD TRANSM. C169 (6 & 7) SEE P. 3
ABS SYSTEM C249 (A & B) SEE P. 22
FROM DASH LTS
RHEOSTAT SEE P. 11
DDR CONNECTOR
24V IGNITION
FROM FR JCT PANEL
CB92 SEE P. 19
TO STOP LTS SW
SEE P. 8
TO RAD. FAN CLUTCH
SPEED #1 SEE P. 9
TO FR SERV. JCT BOX
ENGINE BRAKE SYSTEM
SEE P. 23
TO TACHOMETER
SEE P. 19
PARKING BRAKE SIGNAL
FROM FR JCT PANEL
JCT 69 SEE P. 5
R22
FROM DASH LTS
RHEOST SEE P. 11
FAST IDLE SW.
E.C.M. D.D.E.C. III & IV

D.D.E.C. III & IV

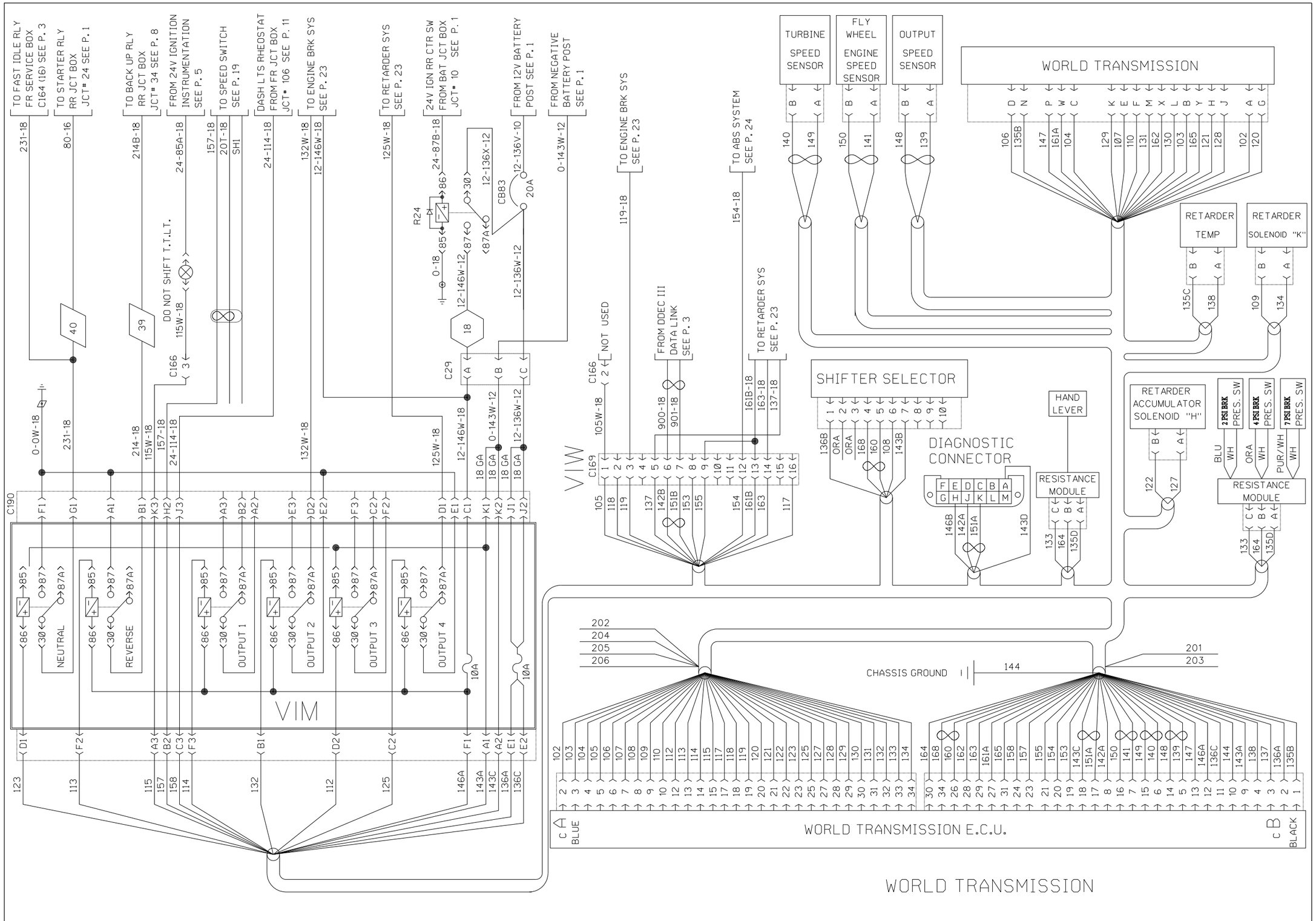

PREVOST CAR inc.	WIRING DIAGRAM	NO: D060871	P. 4	REVISION 000

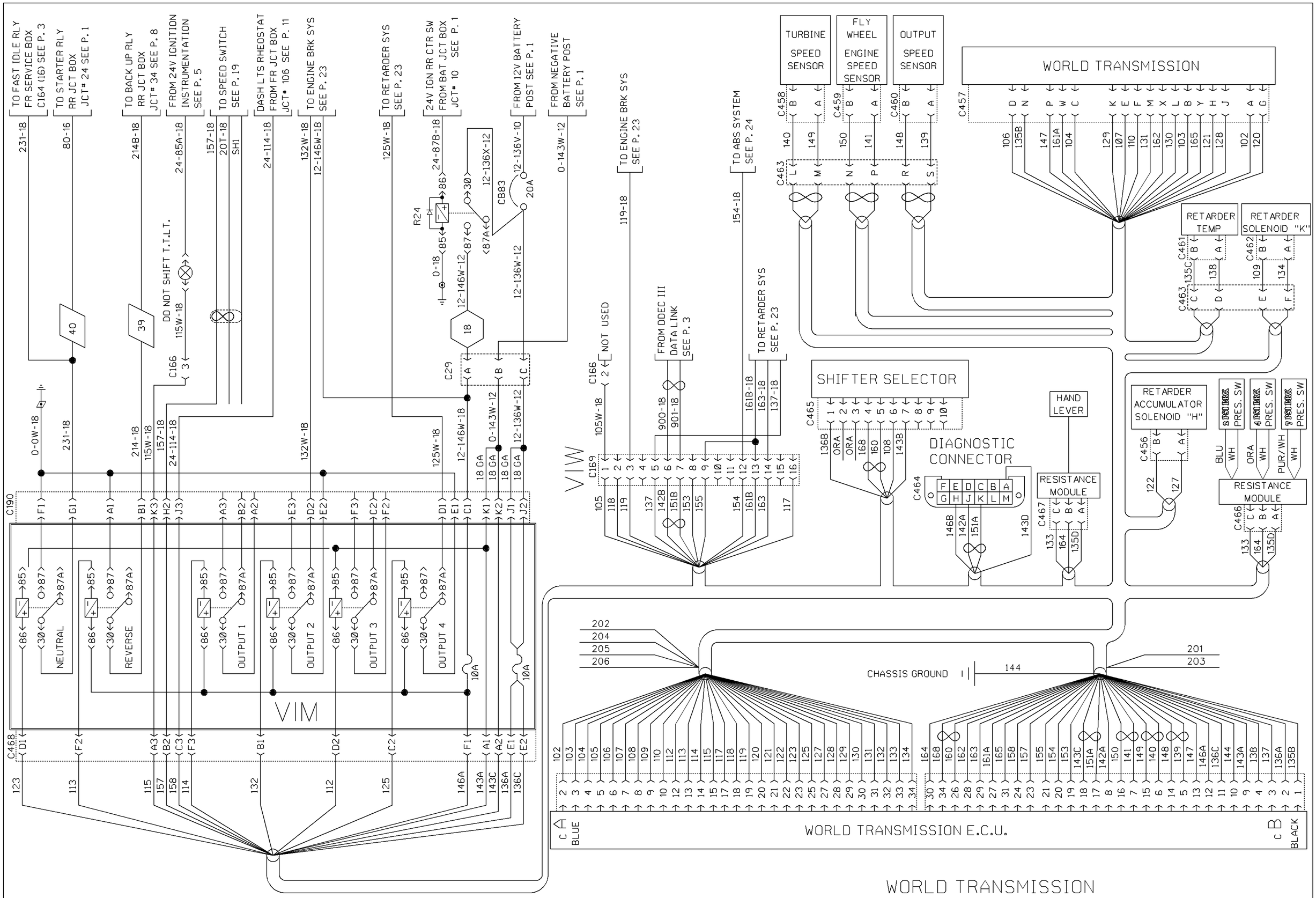

PREVOST CAR inc.	WIRING DIAGRAM	NO: D060871	P. 4	REVISION 007

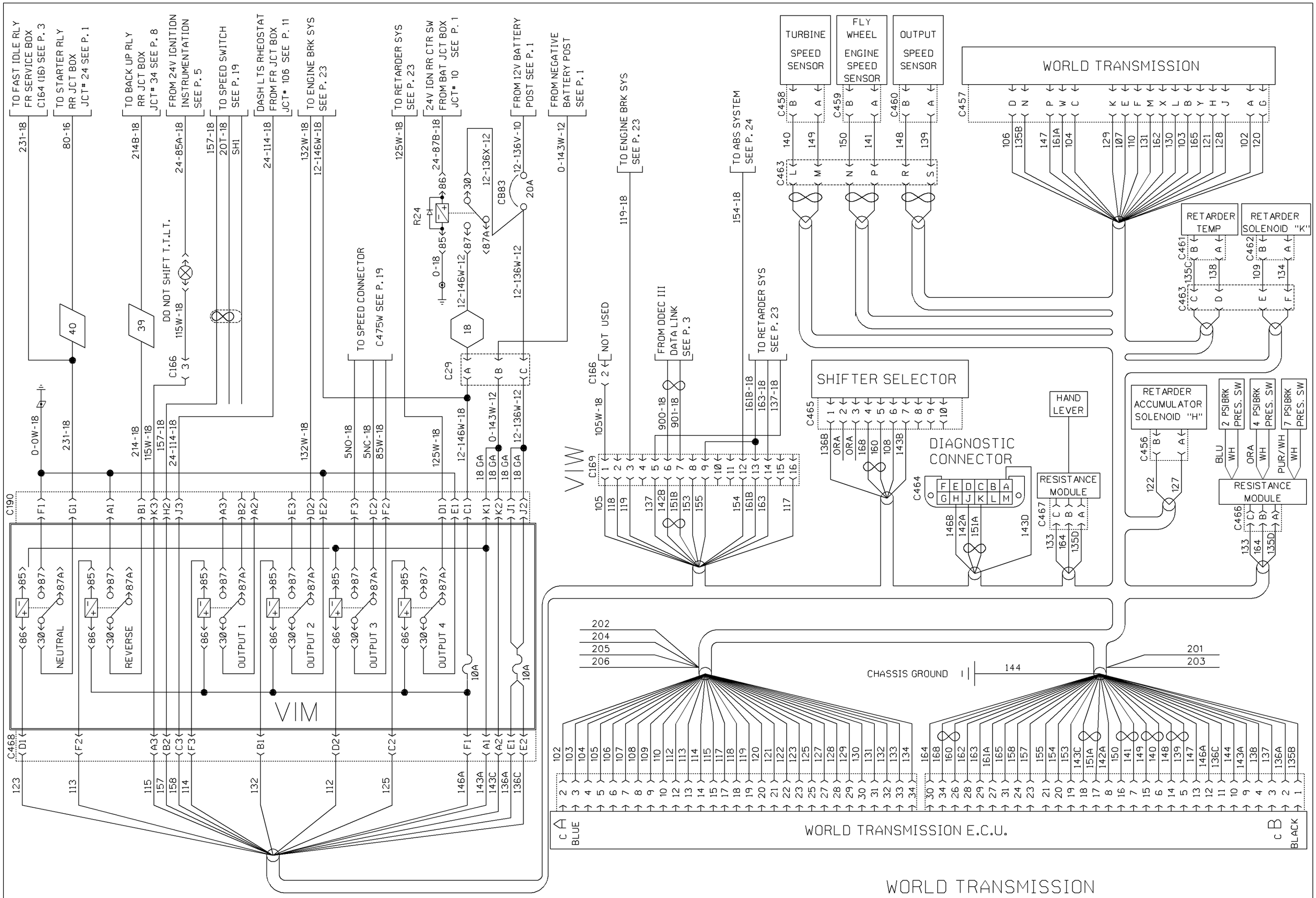

PREVOST CAR inc.	WIRING DIAGRAM	NO: D060871	P. 4	REVISION 010

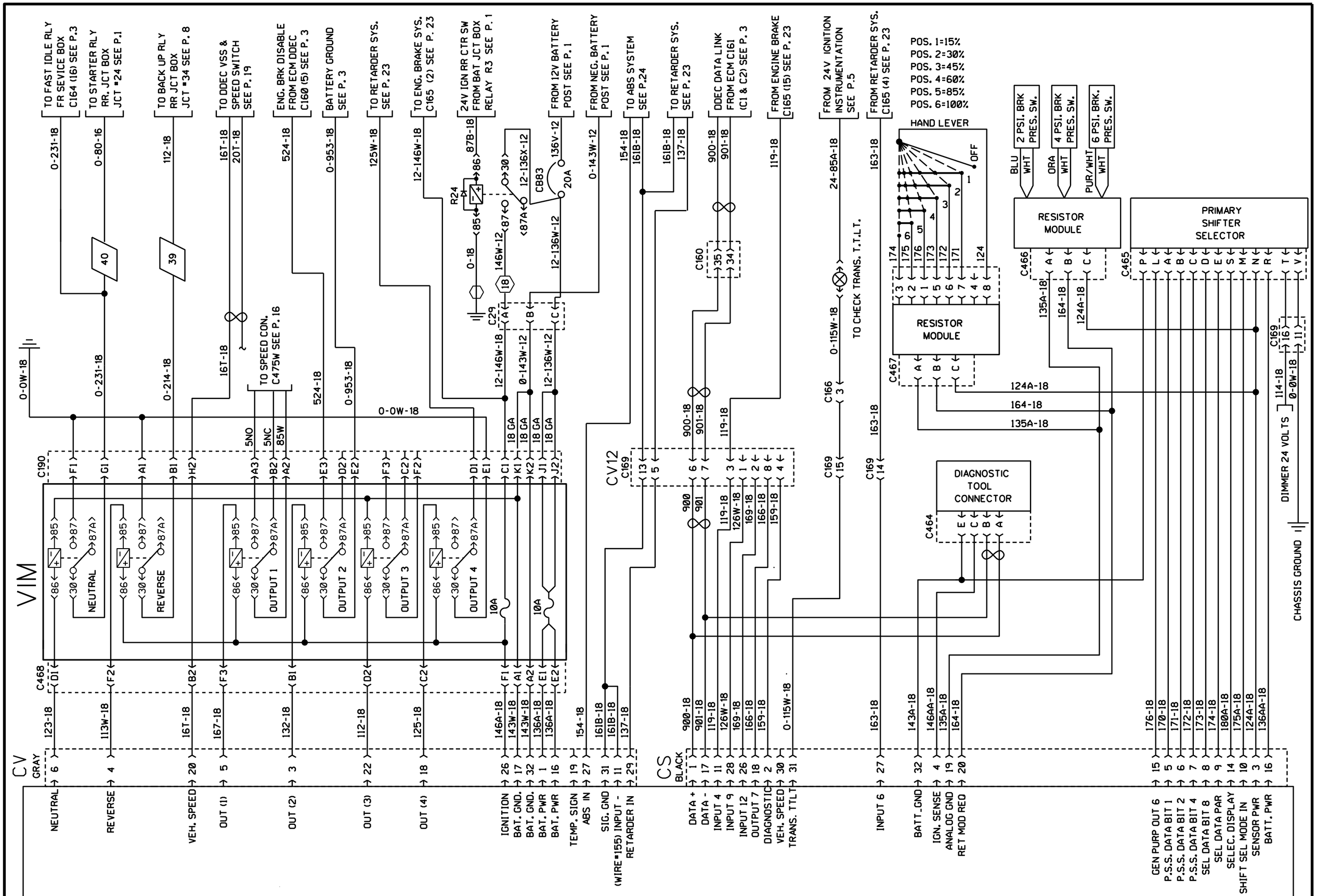

WORLD TRANSMISSION E.C.U.

PREVOST	WIRING DIAGRAM	NO: D060871	PAGE: 4	REVISION 018

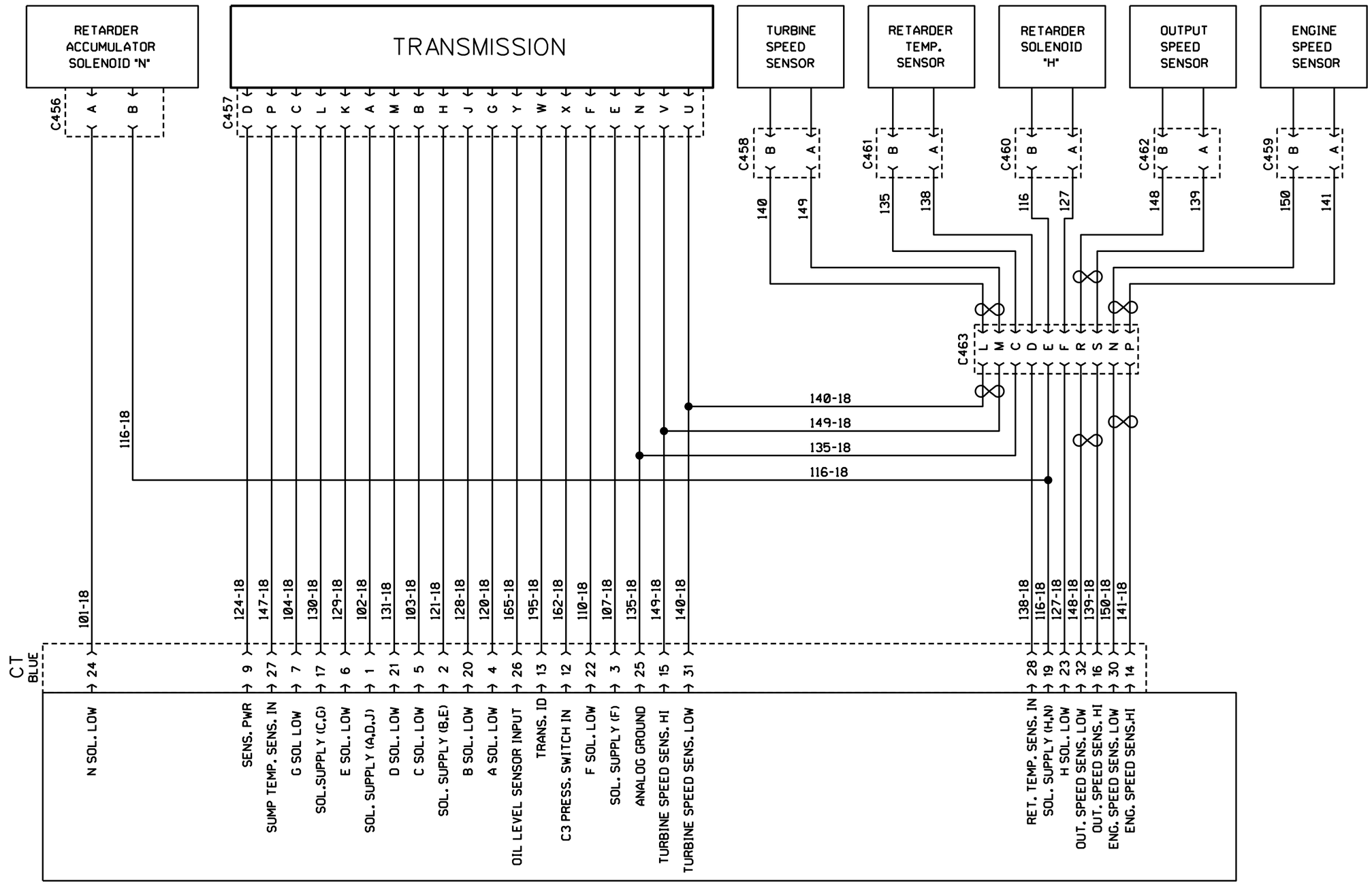

WORLD TRANSMISSION E.C.U. (SUITE)

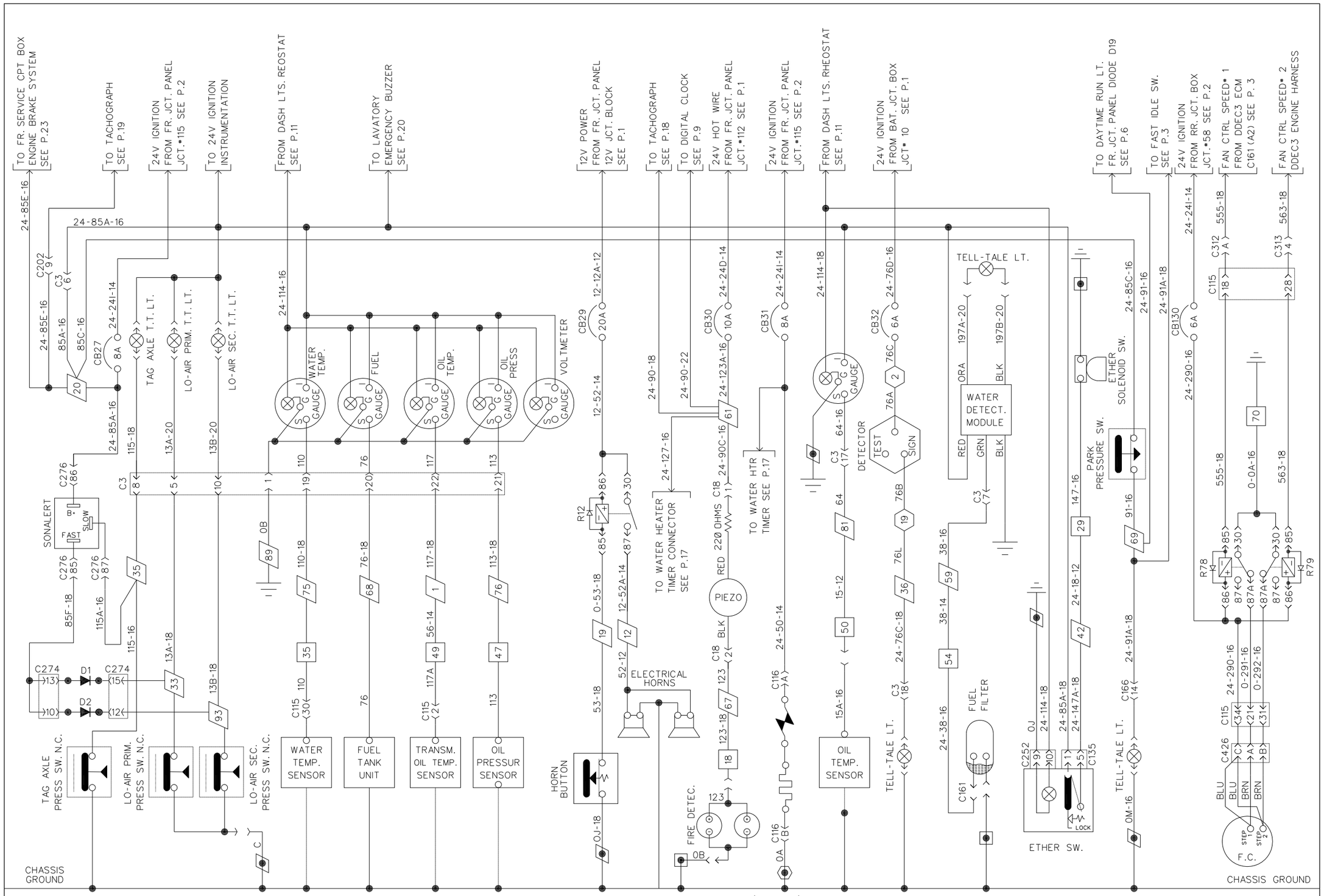

ALARM AND SIGNAL | AIR DRYER | DIFFERENTIAL OIL TEMP. | LOW FUEL | FUEL WATER FILTER | ETHER COLD START | PARKING BRAKE SW. | RADIATOR FAN CLUTCH

PREVOST CAR inc.	WIRING DIAGRAM	NO: D060871	P. 5	PRIOR	REVISION 000

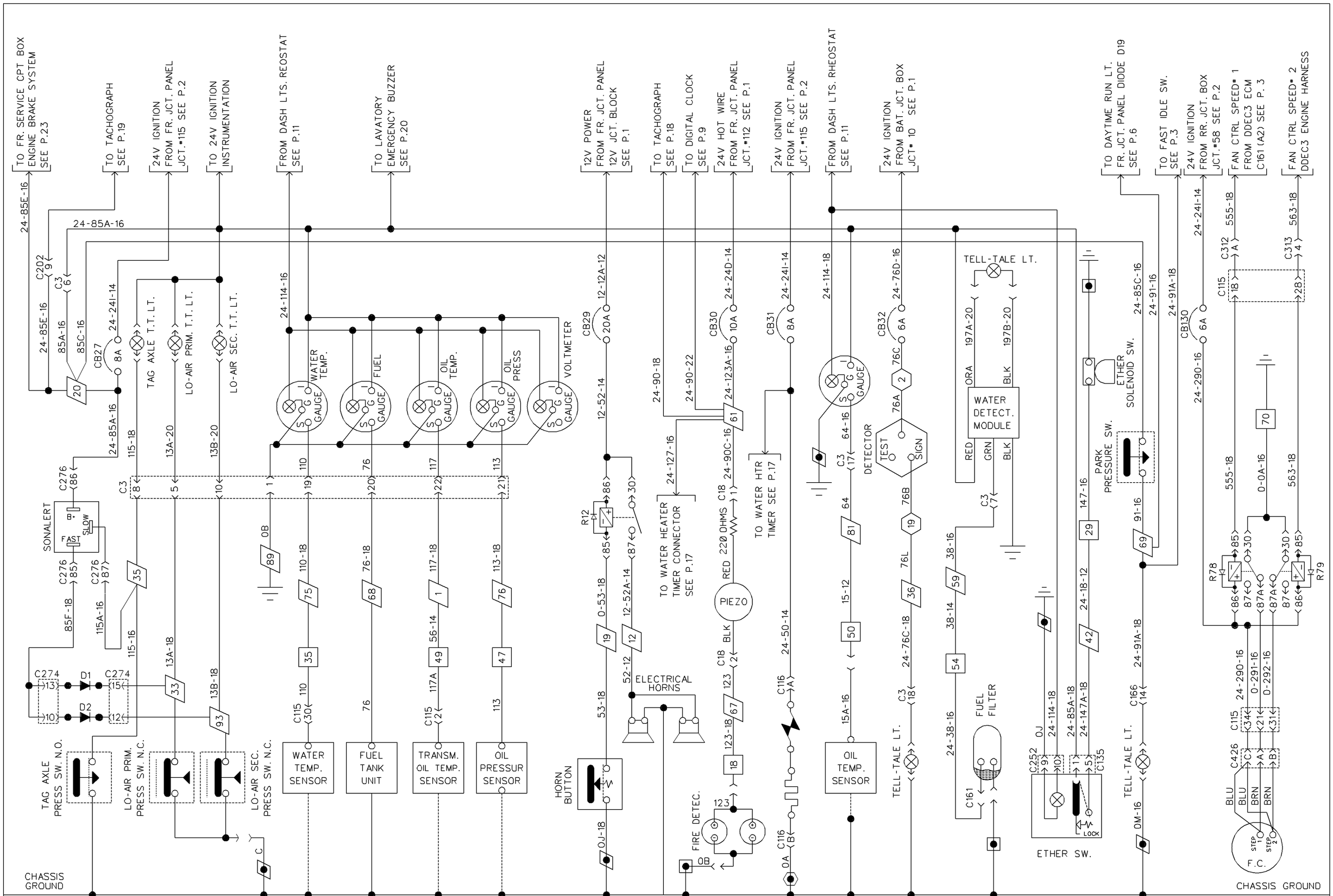

PREVOST CAR inc. | WIRING DIAGRAM | NO: D060871 | P. 5 | REVISION 004

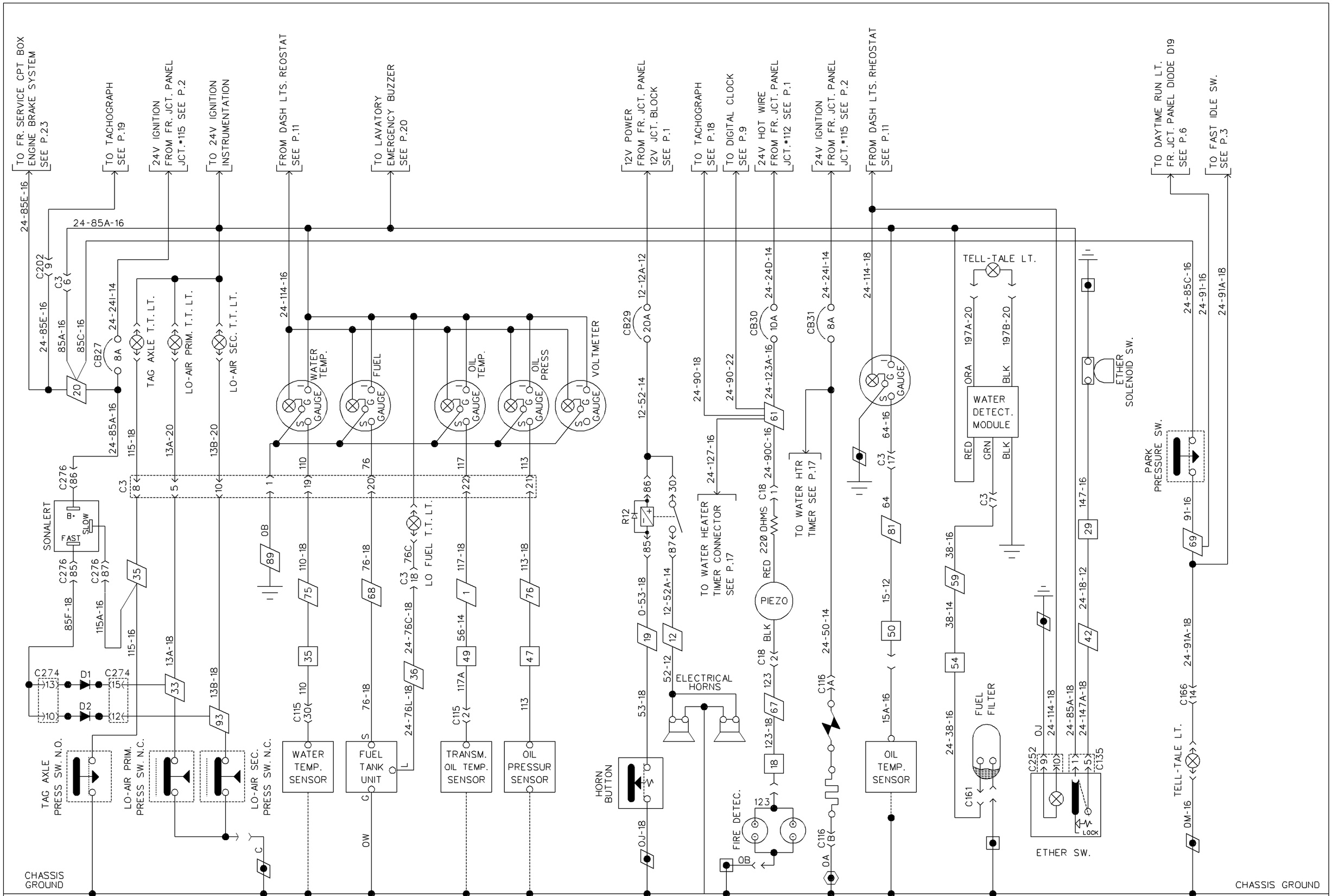

PREVOST CAR inc.	WIRING DIAGRAM	NO: D060871	P. 5	REVISION 014

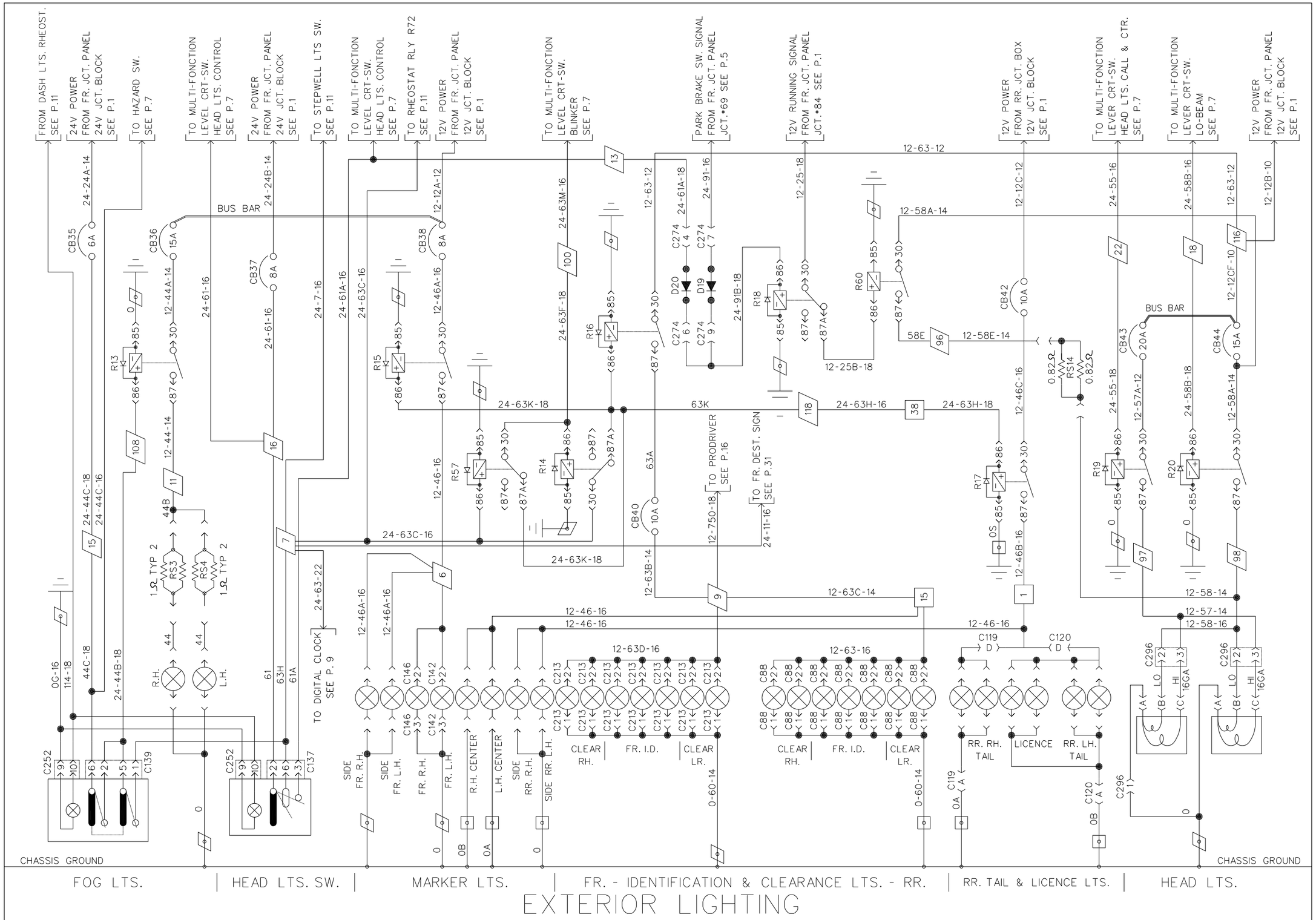

EXTERIOR LIGHTING

PREVOST CAR inc.	WIRING DIAGRAM	NO: D060871	P. 6	REVISION 000

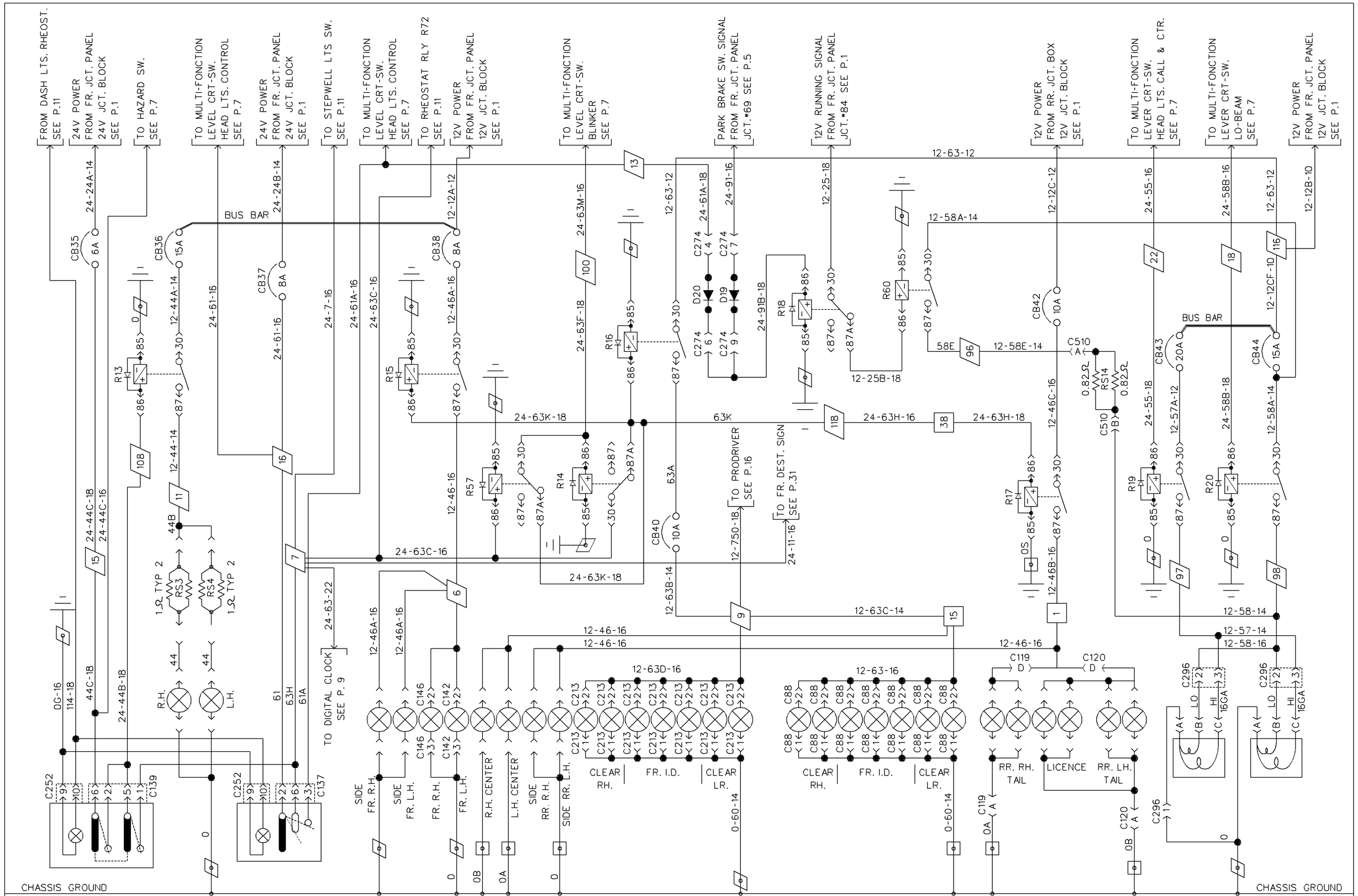

EXTERIOR LIGHTING

PREVOST CAR inc.	WIRING DIAGRAM	NO: D060871	P. 6	REVISION 012

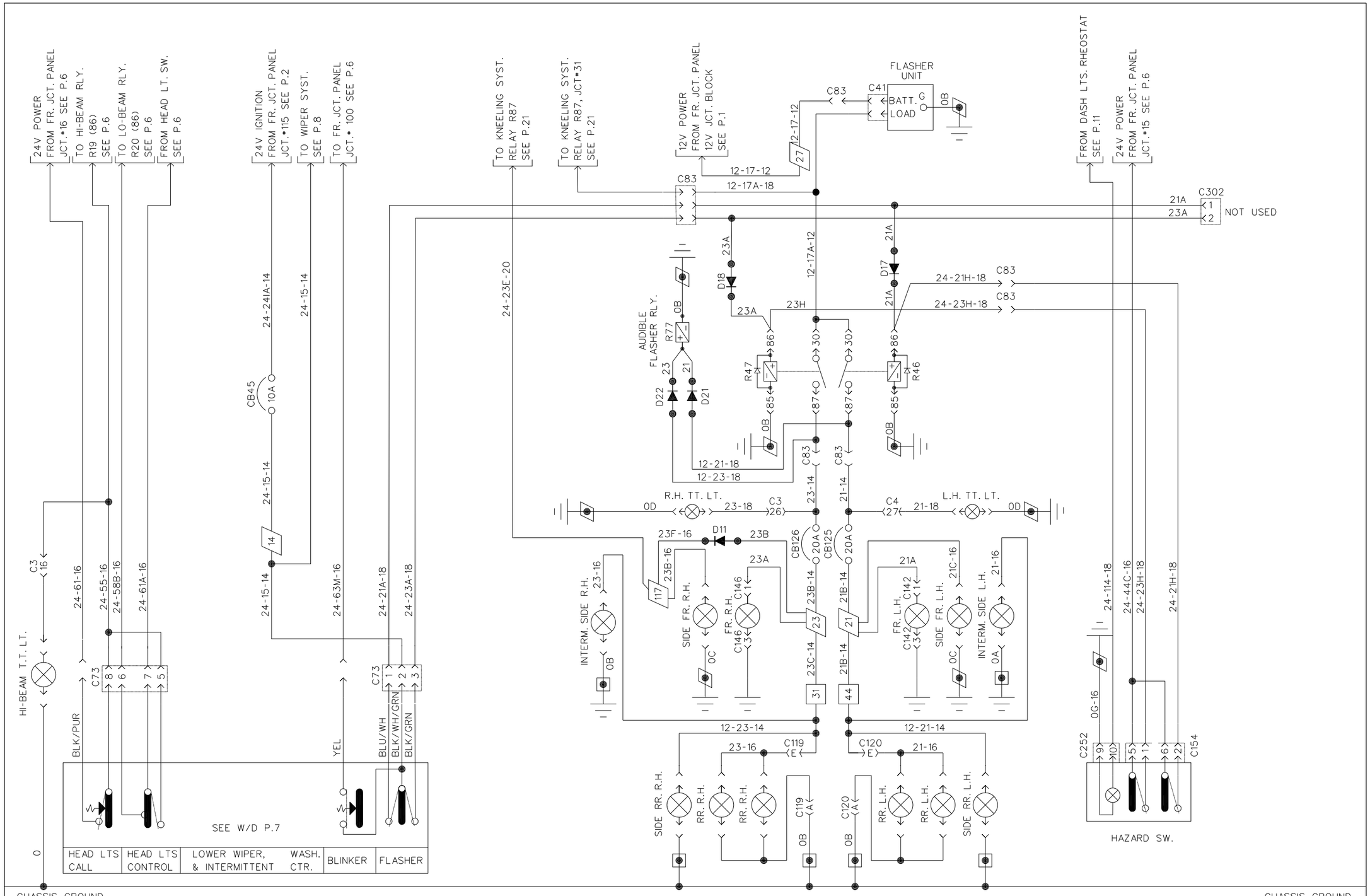

MULTI-FUNCTION LEVEL CTR. SW.

DIRECTIONNAL AND HAZARD LTS.

EXTERIOR LIGHTING

PREVOST CAR inc.	WIRING DIAGRAM	NO: D060871	P. 7	REVISION 000

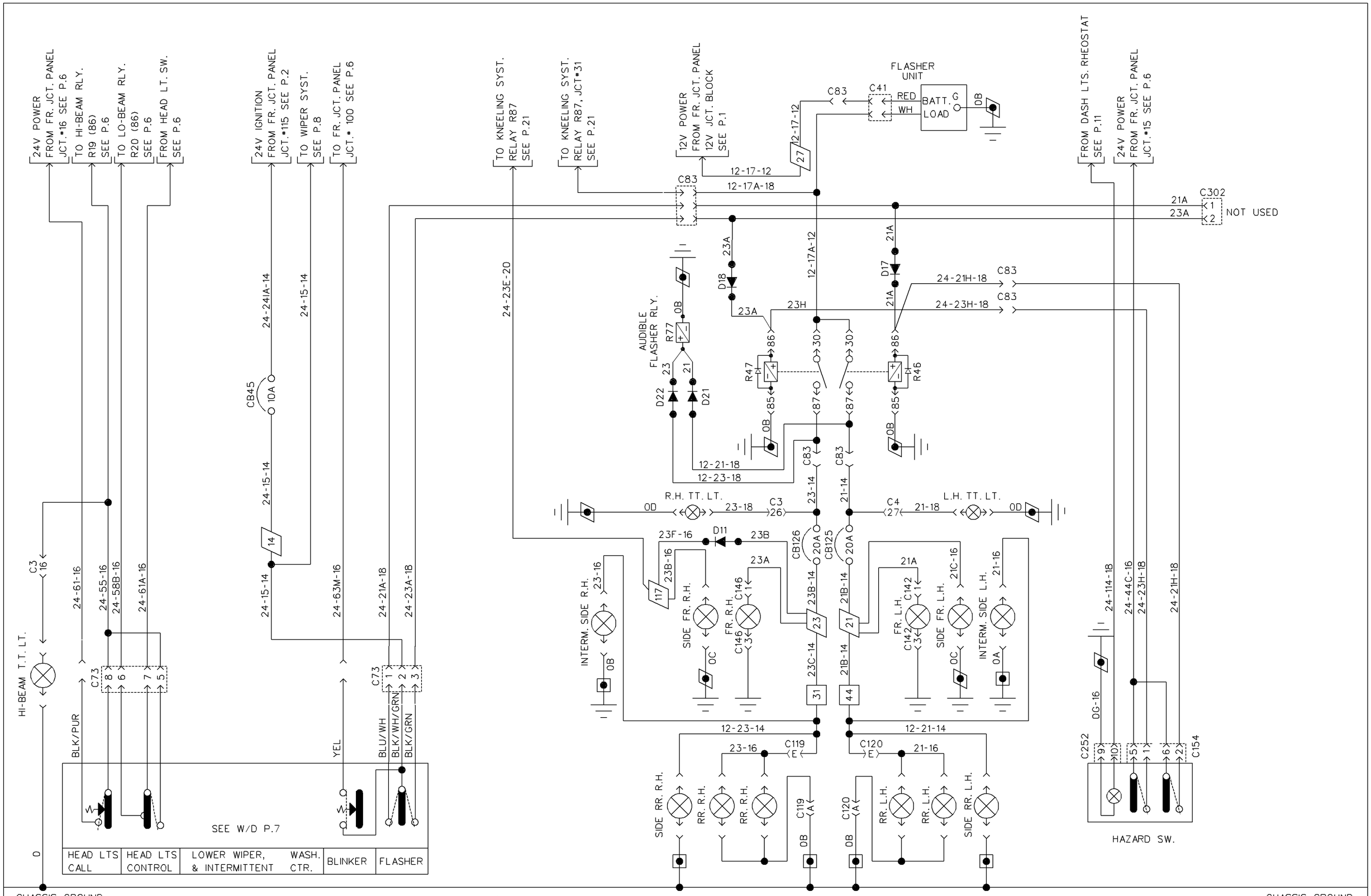

MULTI-FUNCTION LEVEL CTR. SW.

DIRECTIONNAL AND HAZARD LTS.

EXTERIOR LIGHTING

PREVOST CAR inc.	WIRING DIAGRAM	NO: D060871	P. 7	REVISION 012

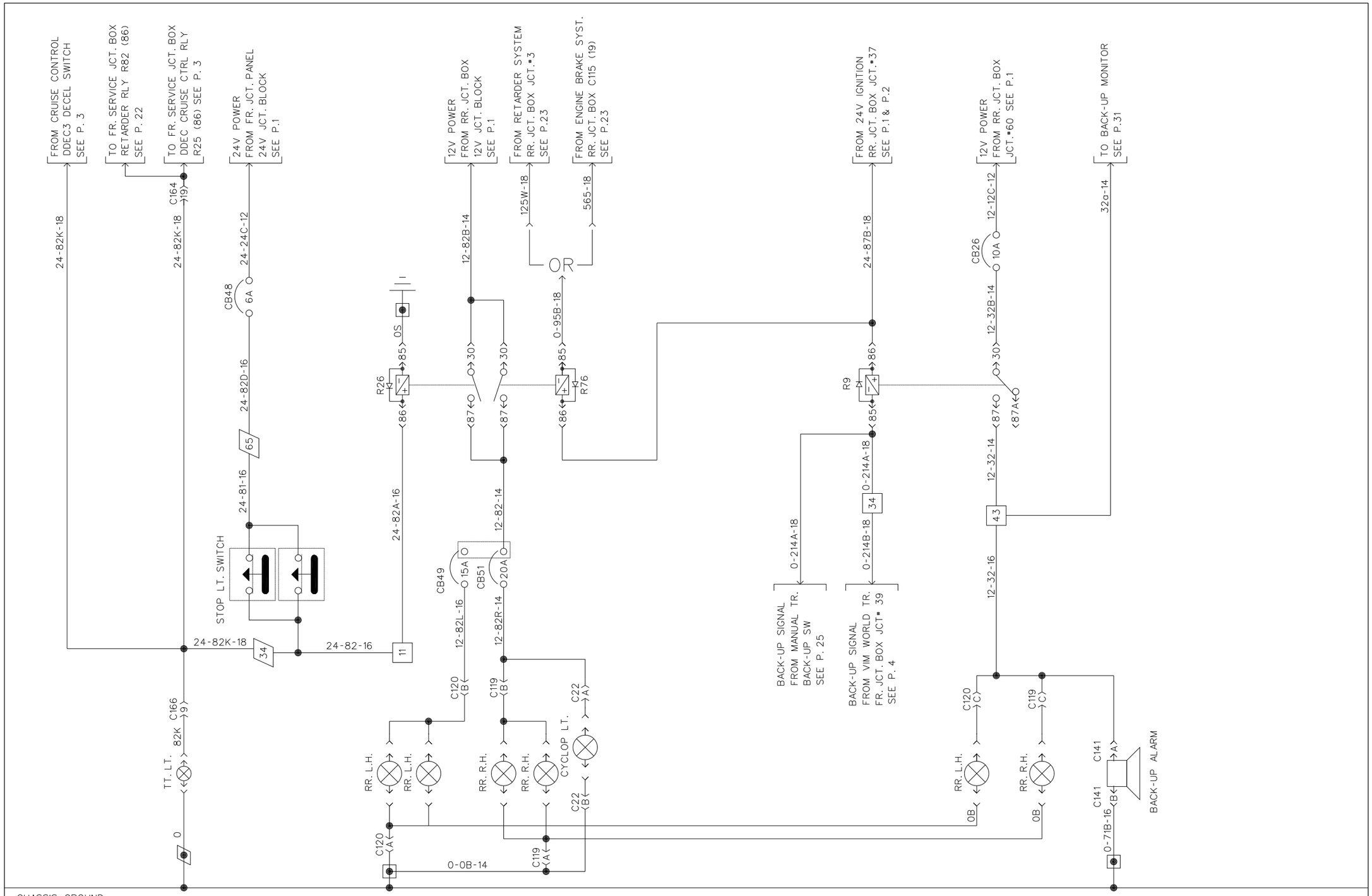

EXTERIOR LIGHTING

PREVOST CAR inc.	WIRING DIAGRAM	NO: D060871	P. 8	REVISION 000

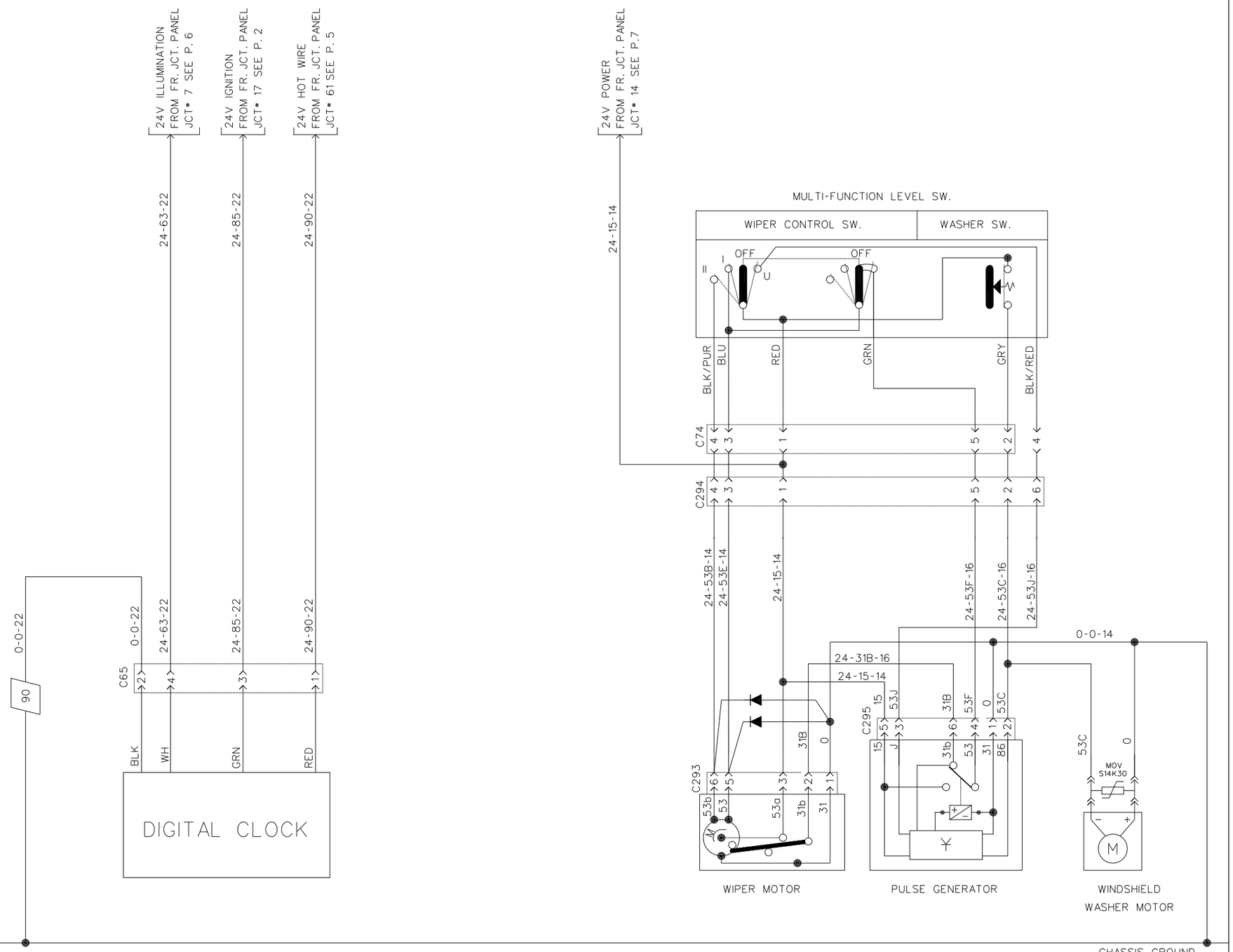

DIGITAL CLOCK | WINDSHIELD WIPER AND WASHER

PREVOST CAR inc.	WIRING DIAGRAM	NO: D060871	P. 9	REVISION 000

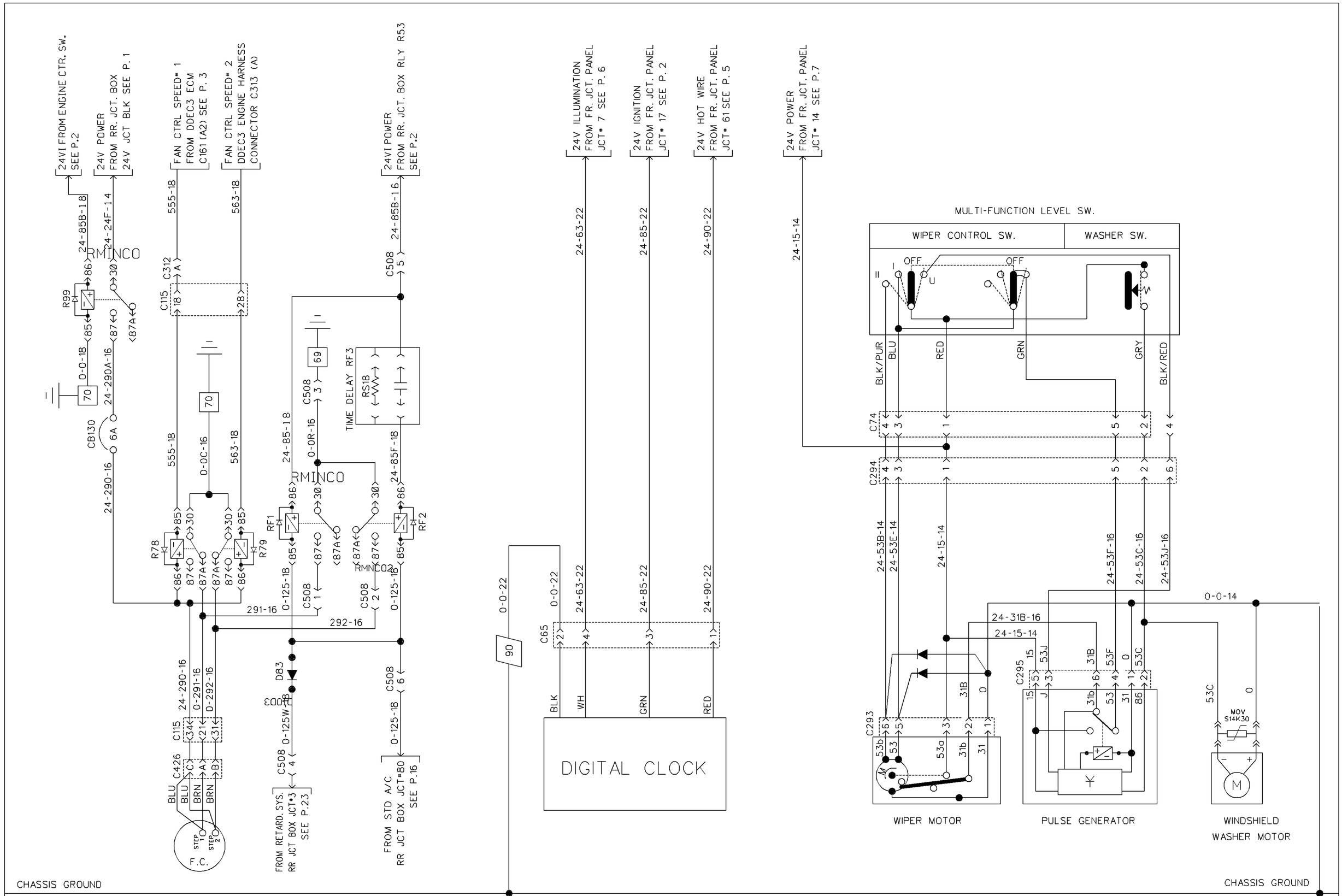

RADIATOR FAN CLUTCH | DIGITAL CLOCK | WINDSHIELD WIPER AND WASHER

PREVOST CAR inc.	WIRING DIAGRAM	NO: D060871	P. 9	REVISION 006

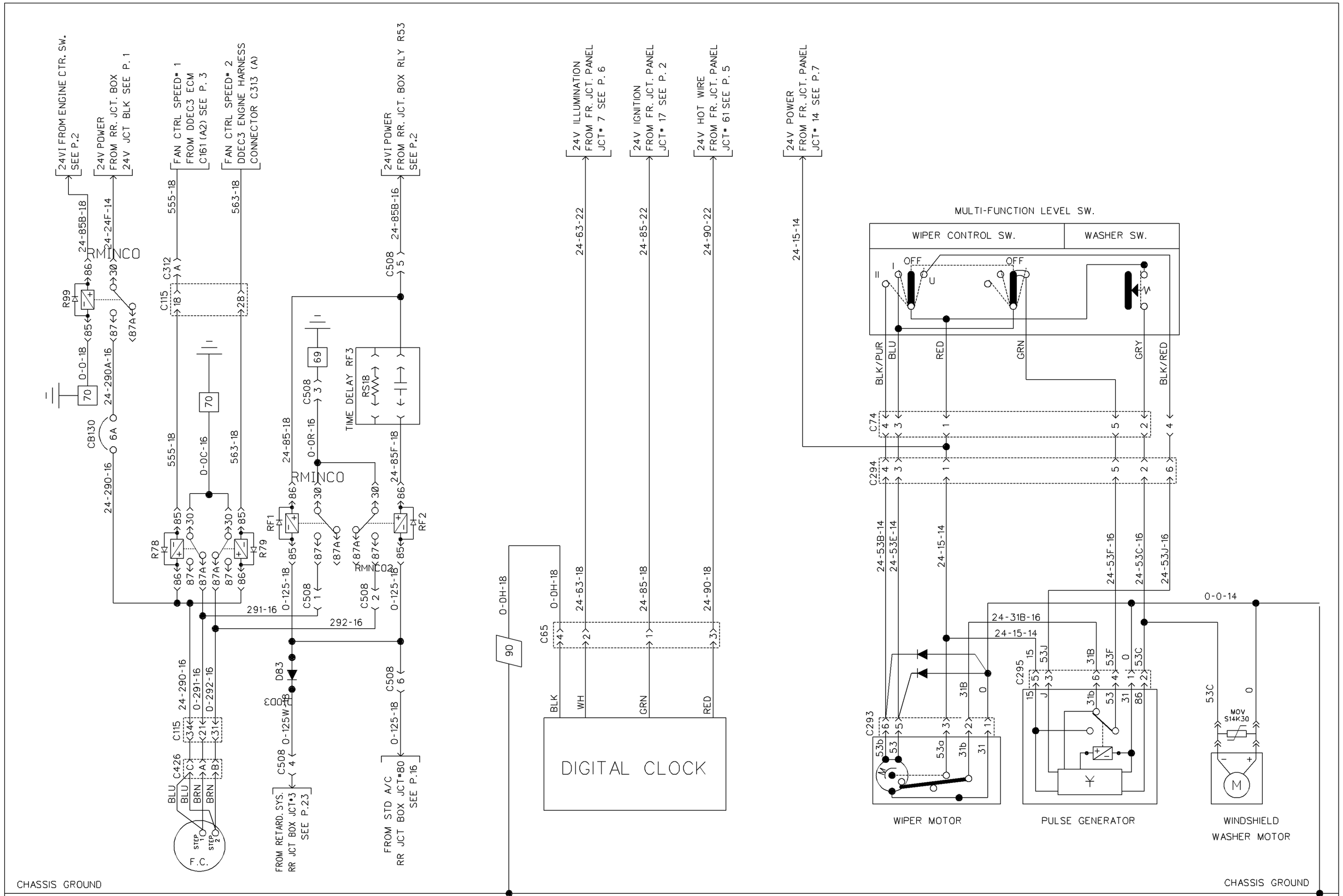

RADIATOR FAN CLUTCH | DIGITAL CLOCK | WINDSHIELD WIPER AND WASHER

PREVOST CAR inc.	WIRING DIAGRAM	NO: D060871	P. 9	REVISION 011

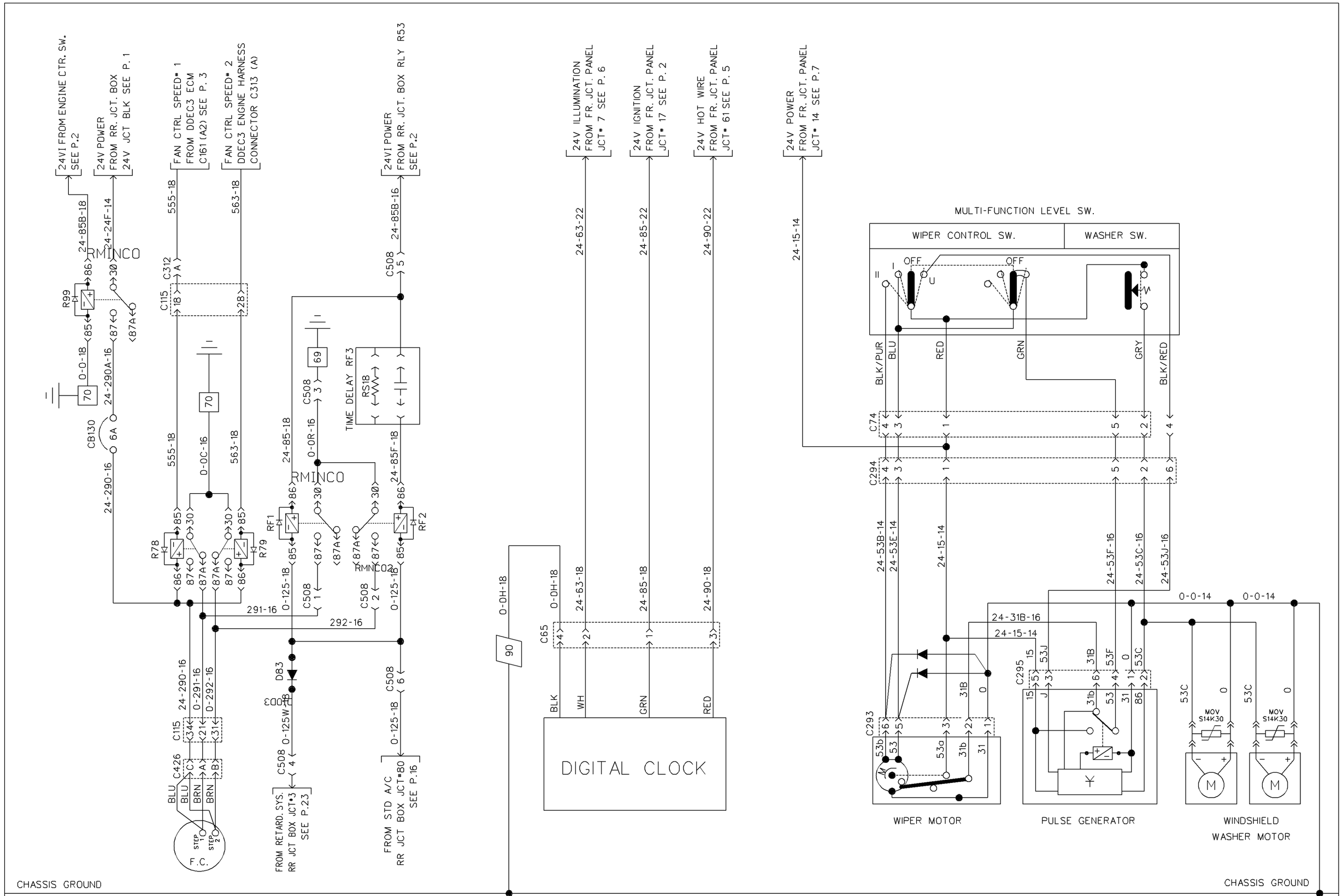

RADIATOR FAN CLUTCH | DIGITAL CLOCK | WINDSHIELD WIPER AND WASHER

PREVOST CAR inc.	WIRING DIAGRAM	NO: D060871	P. 9	REVISION 013

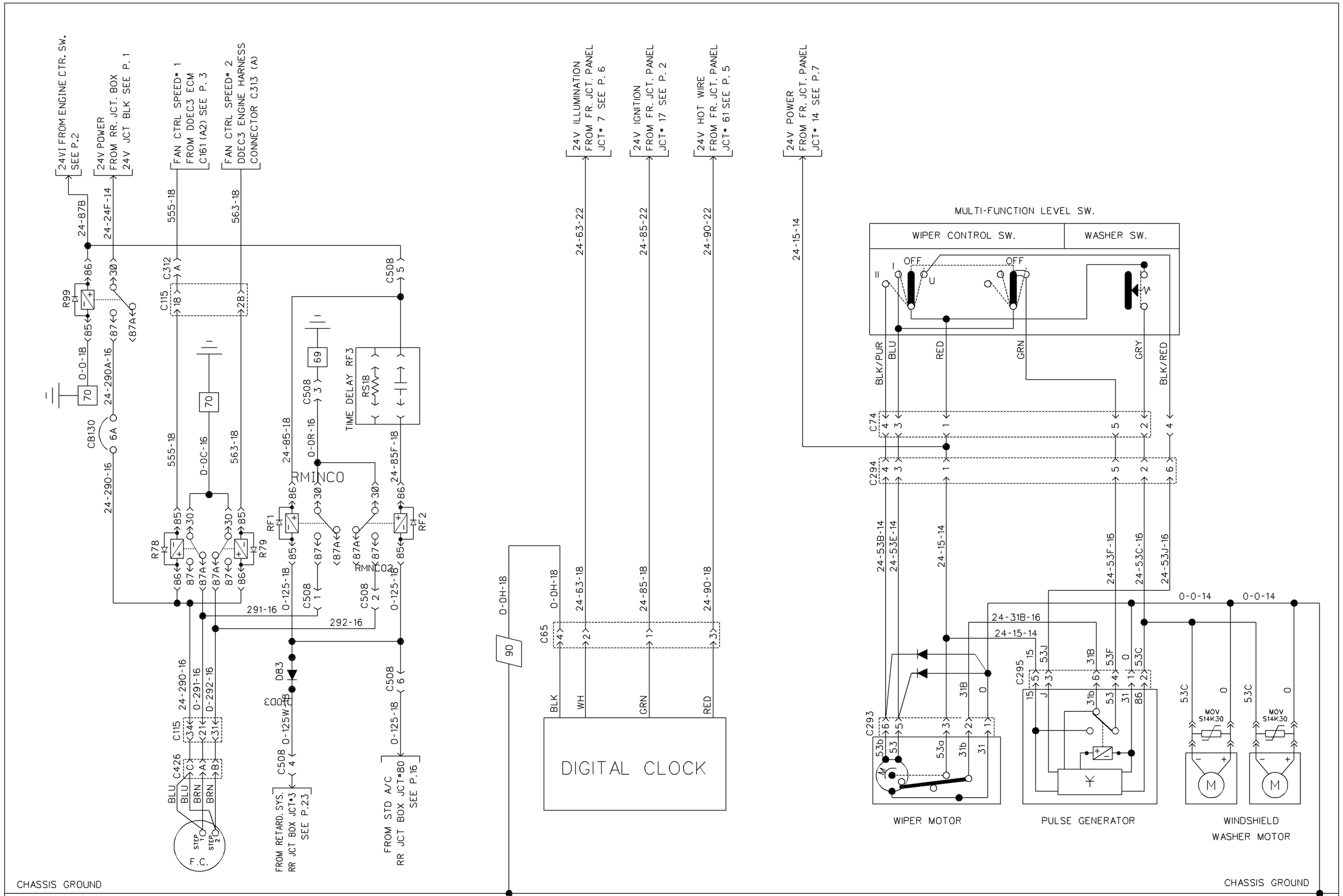

RADIATOR FAN CLUTCH | DIGITAL CLOCK | WINDSHIELD WIPER AND WASHER

PREVOST CAR inc.	WIRING DIAGRAM	NO: D060871	P. 9	REVISION 022

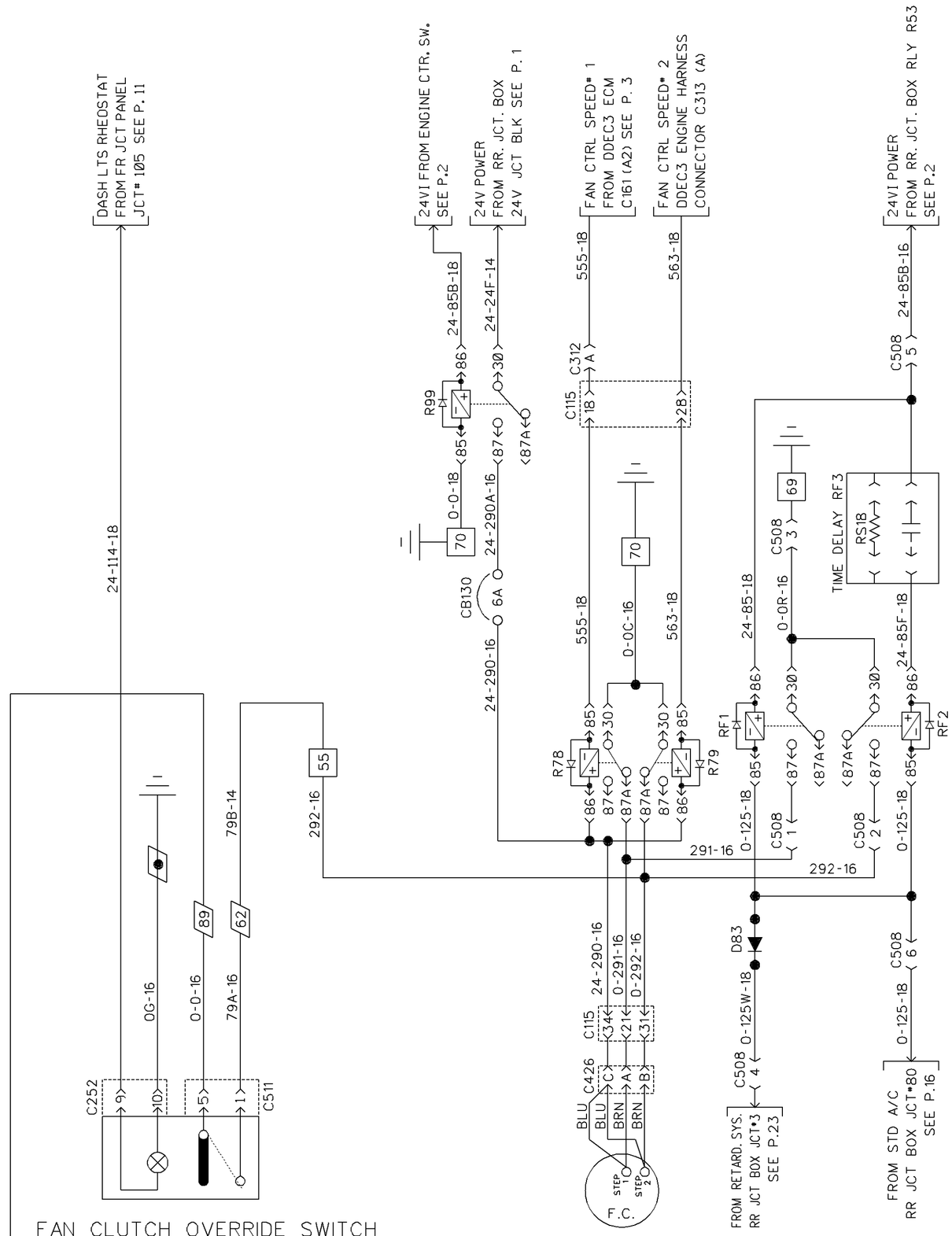

RADIATOR FAN CLUTCH WITH DRIVER'S OVERRIDE SWITCH

SPECIAL OPTION

PREVOST CAR inc.	WIRING DIAGRAM	NO: D060871	P. 9SP1	REVISION 015

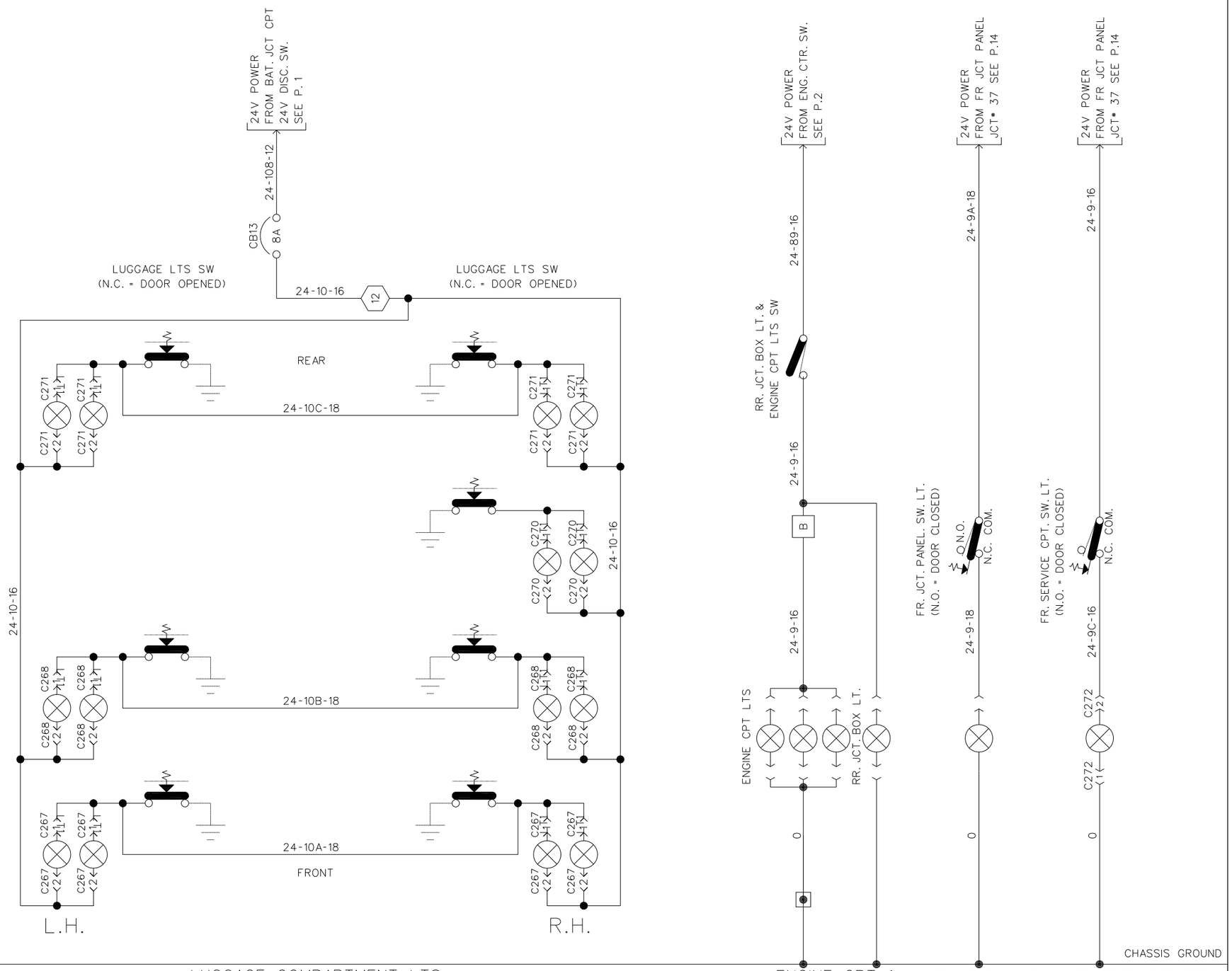

INTERIOR LIGHTING

PREVOST CAR inc.	WIRING DIAGRAM	NO: D060871	P.10	REVISION 000

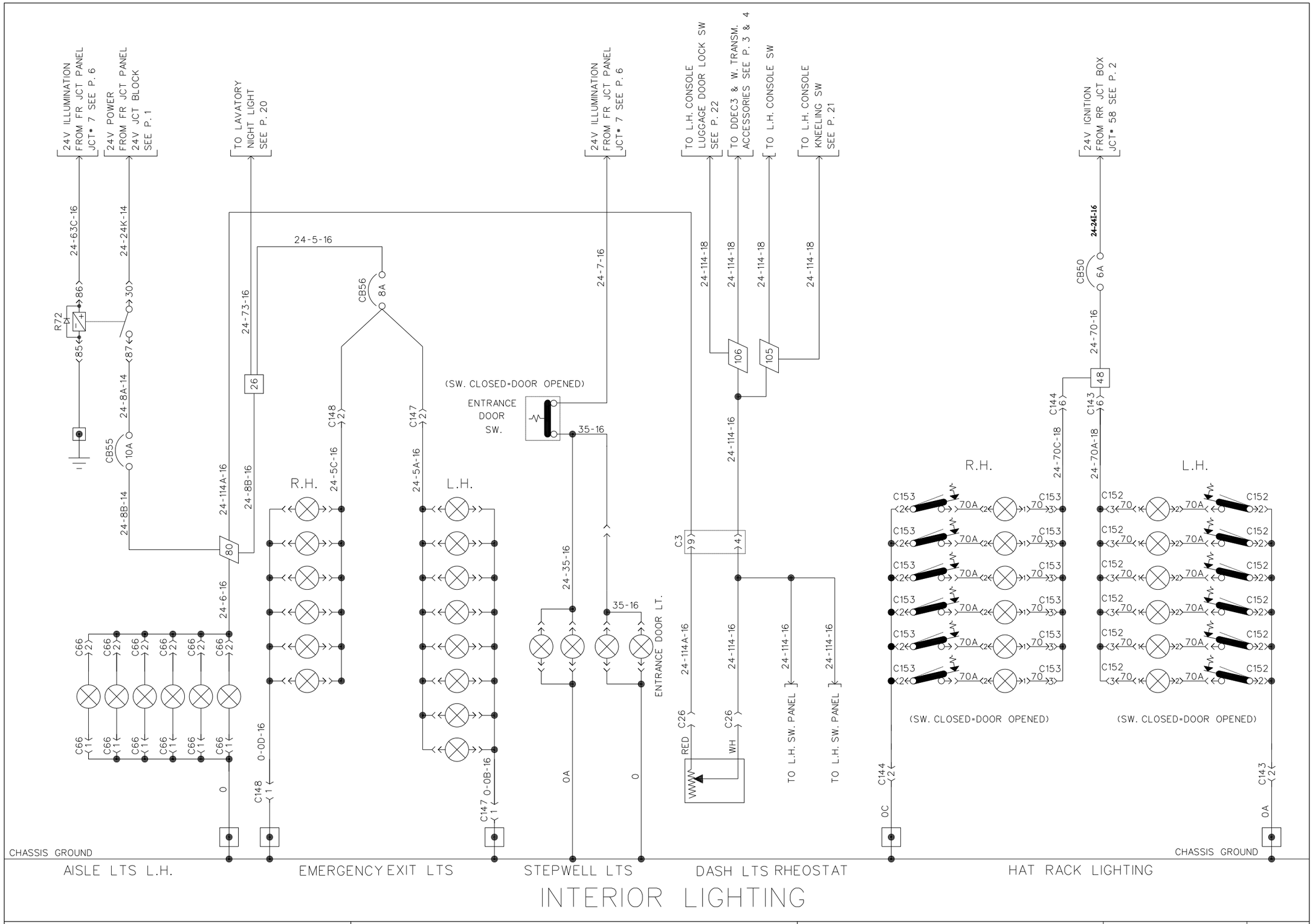

INTERIOR LIGHTING

PREVOST CAR inc.	WIRING DIAGRAM	NO: D060871	P. 11	REVISION 000

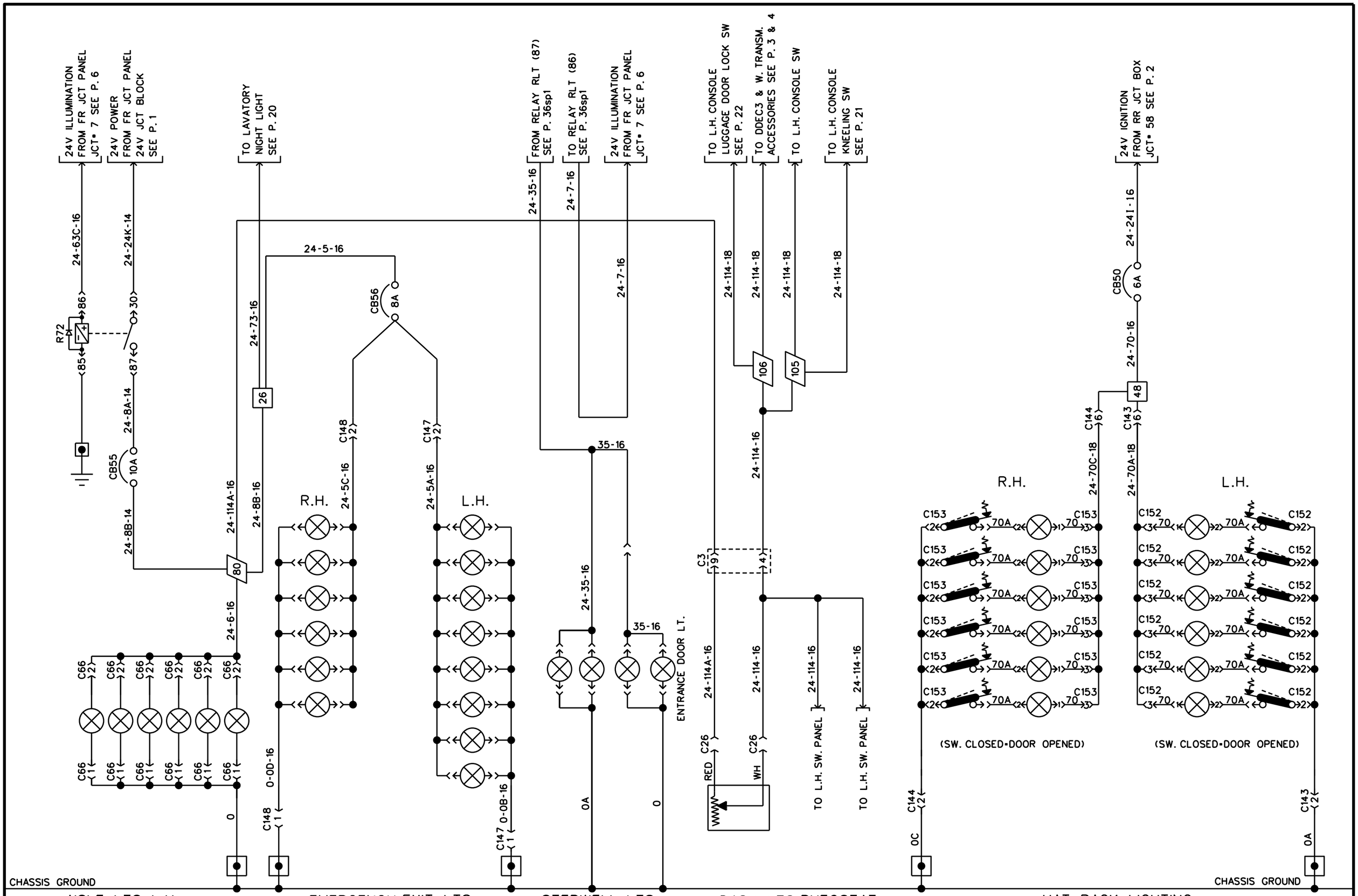

INTERIOR LIGHTING

PREVOST CAR inc.	WIRING DIAGRAM	NO: D060871	P. 11 sp1	REVISION 00

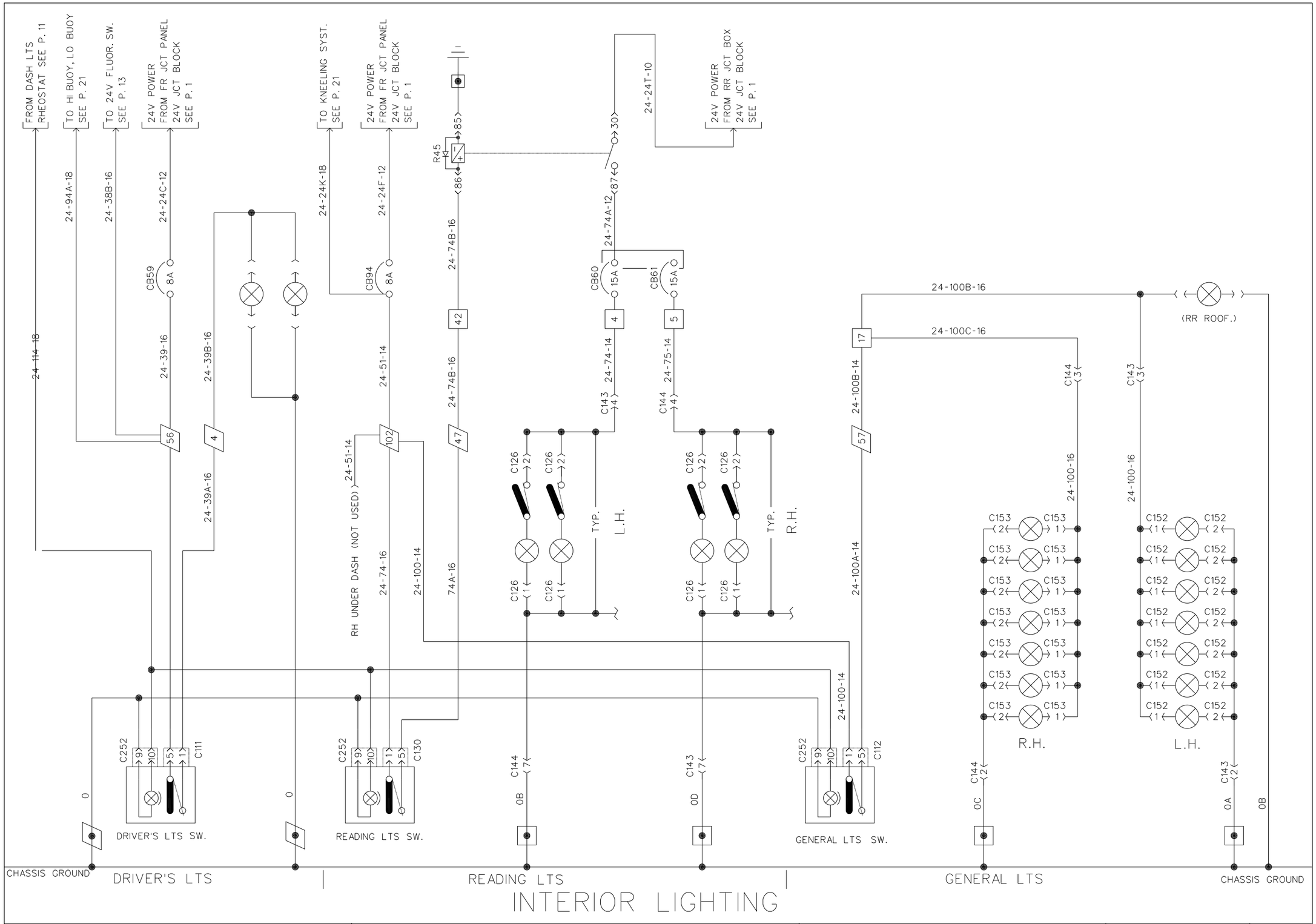

INTERIOR LIGHTING

PREVOST CAR inc.	WIRING DIAGRAM	NO: D060871	P. 12	REVISION 000

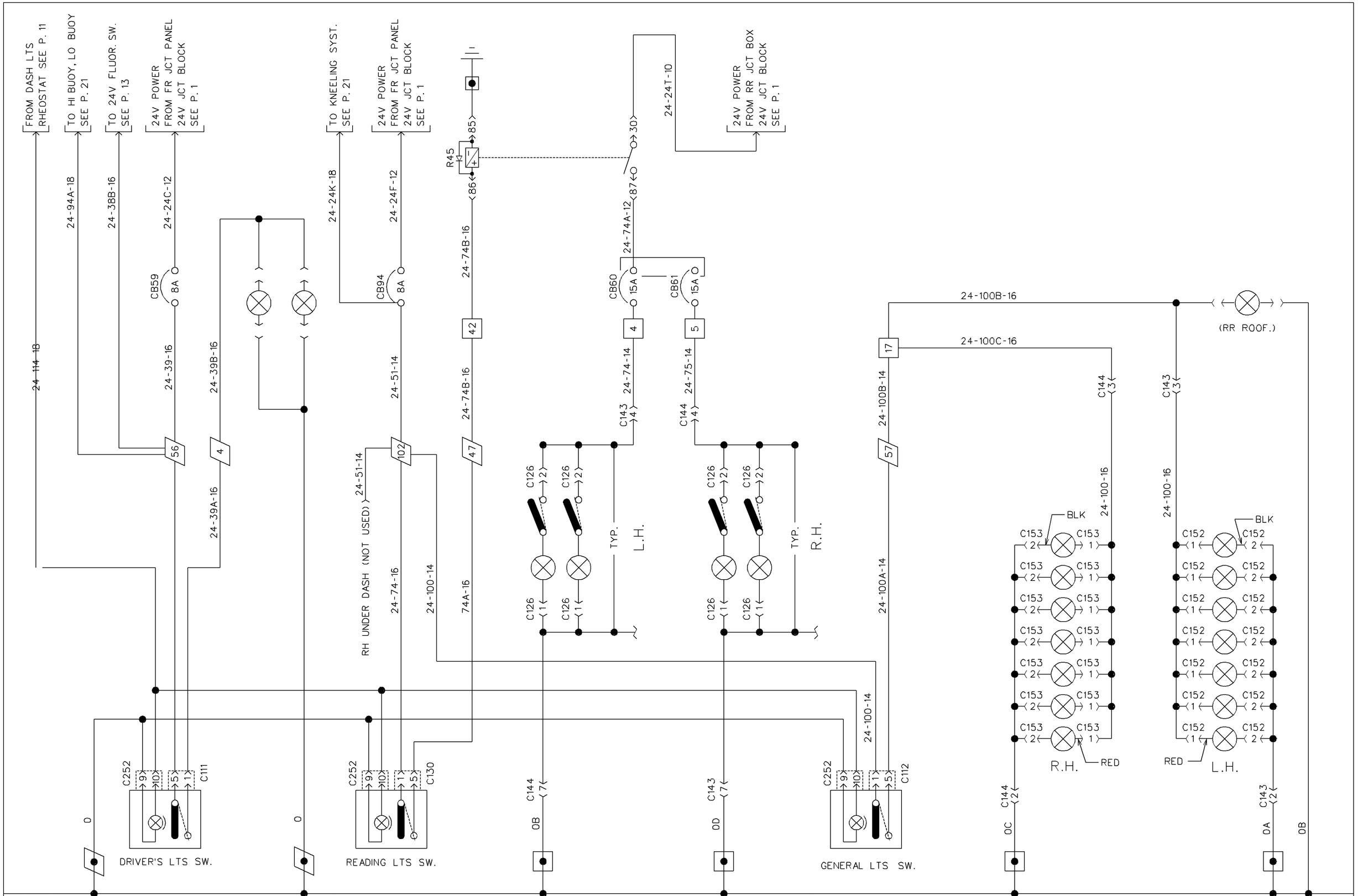

INTERIOR LIGHTING

PREVOST CAR inc.	WIRING DIAGRAM	NO: D060871	P. 12	REVISION 012

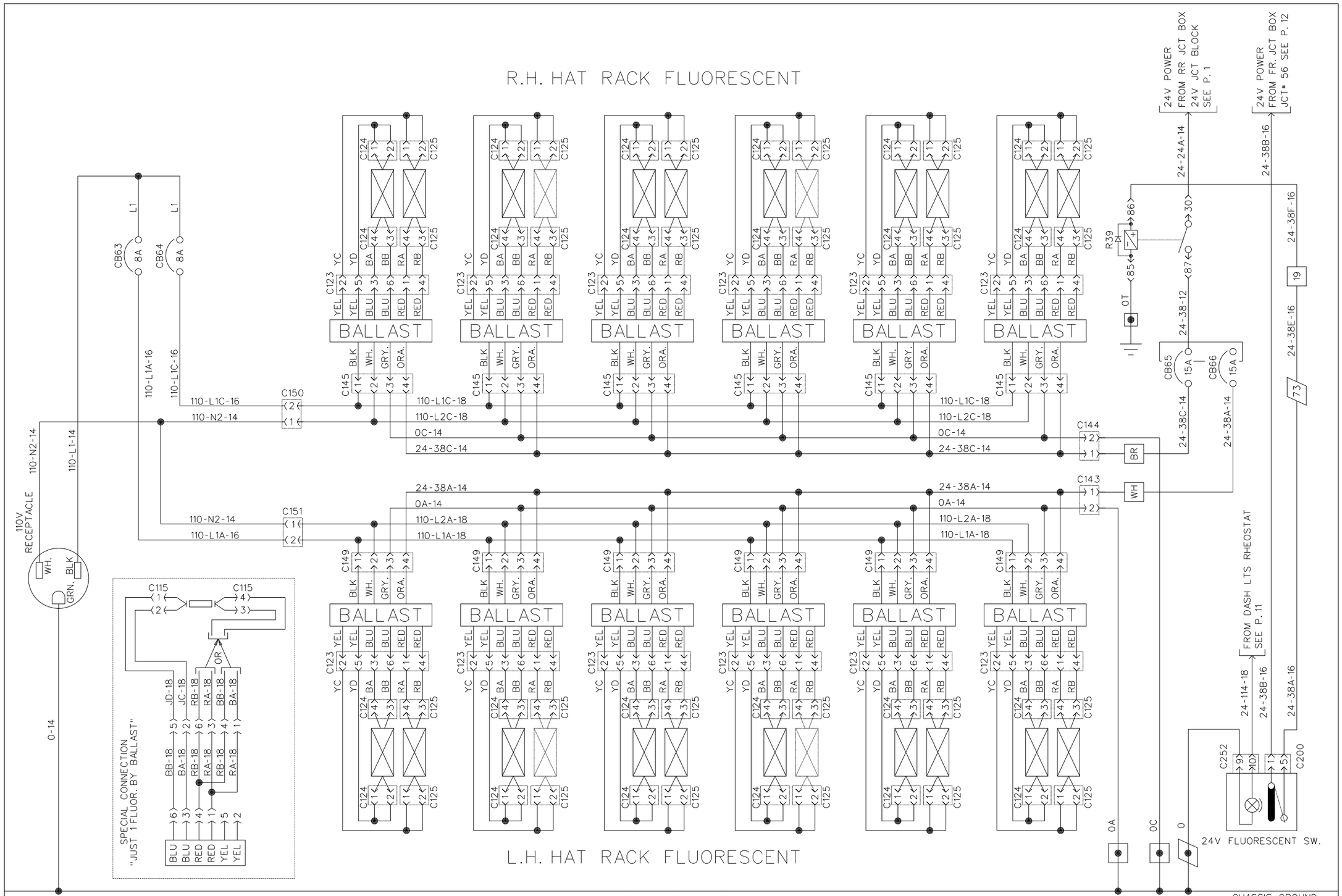

24V & 110V FLUORESCENT

INTERIOR LIGHTING

PREVOST CAR inc.	WIRING DIAGRAM	NO: D060871	P. 13	REVISION 000

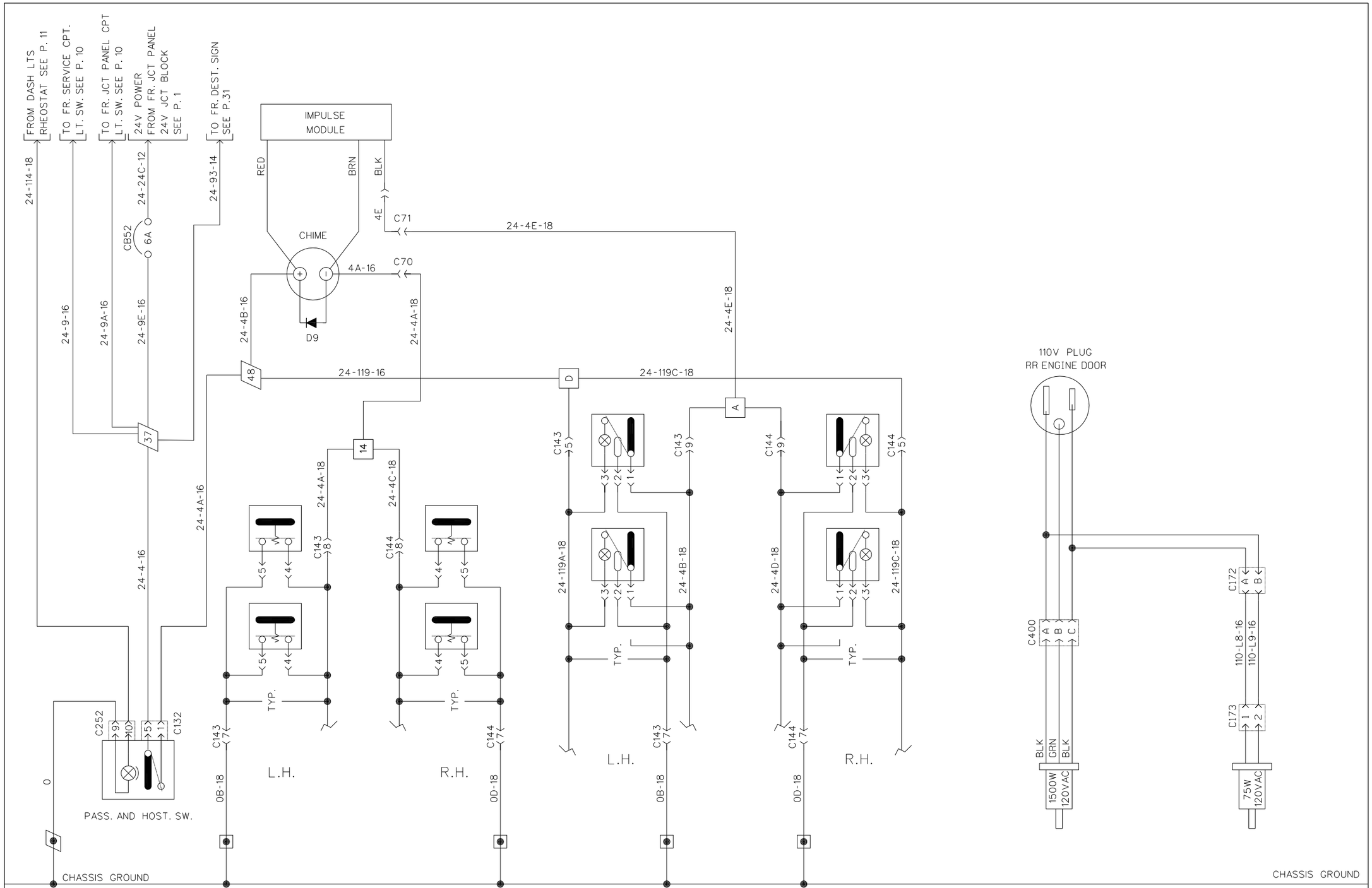

PASSENGER CHIME	HOSTESS CHIME	ENGINE BLOCK HEATER	WATER TANK HEATER

PREVOST CAR inc.	WIRING DIAGRAM	NO: D060871	P. 14	REVISION 000

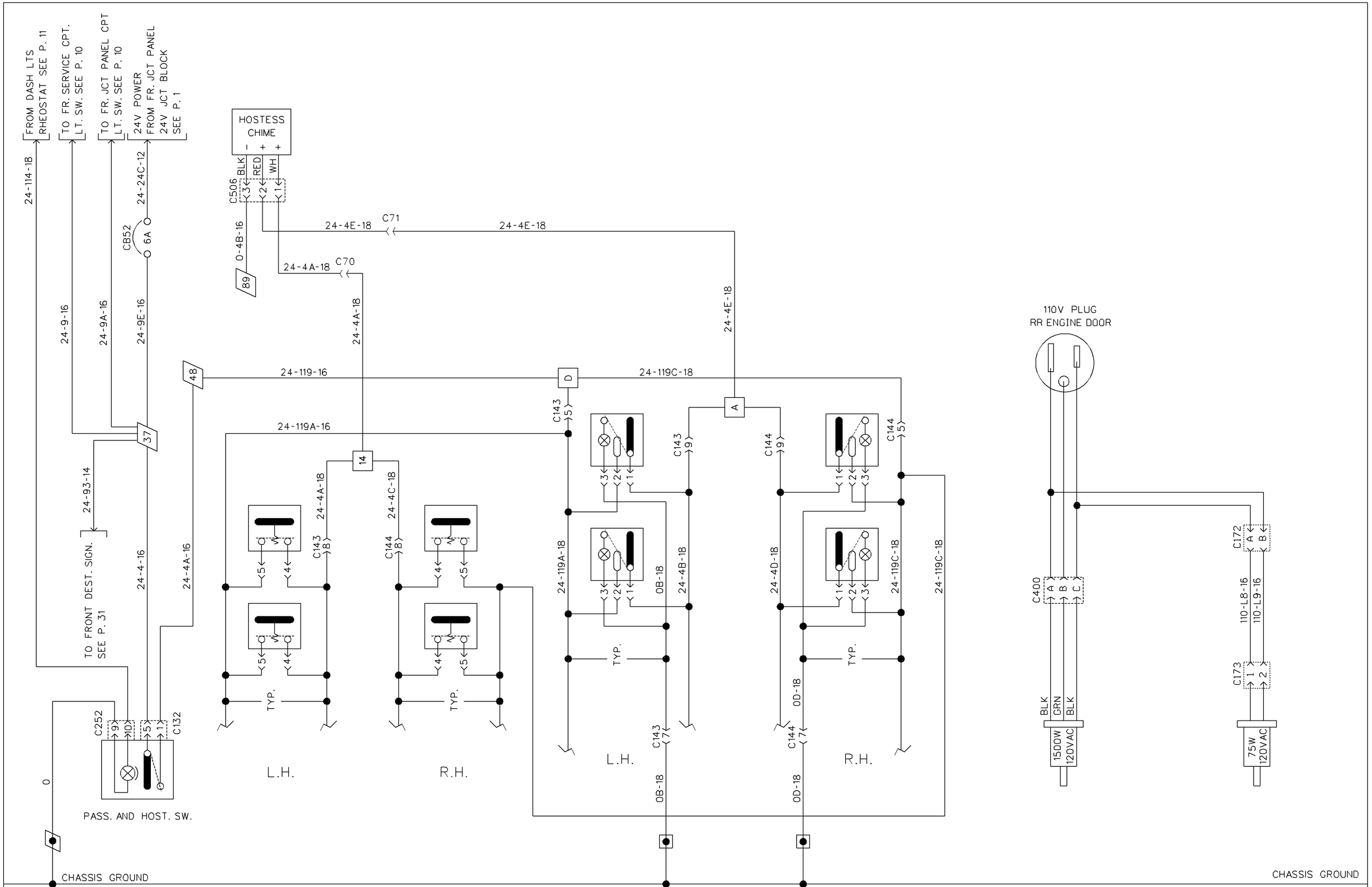

PASSENGER CHIME	HOSTESS CHIME	ENGINE BLOCK HEATER	WATER TANK HEATER

PREVOST CAR inc.	WIRING DIAGRAM	NO: D060871	P.14	REVISION 018

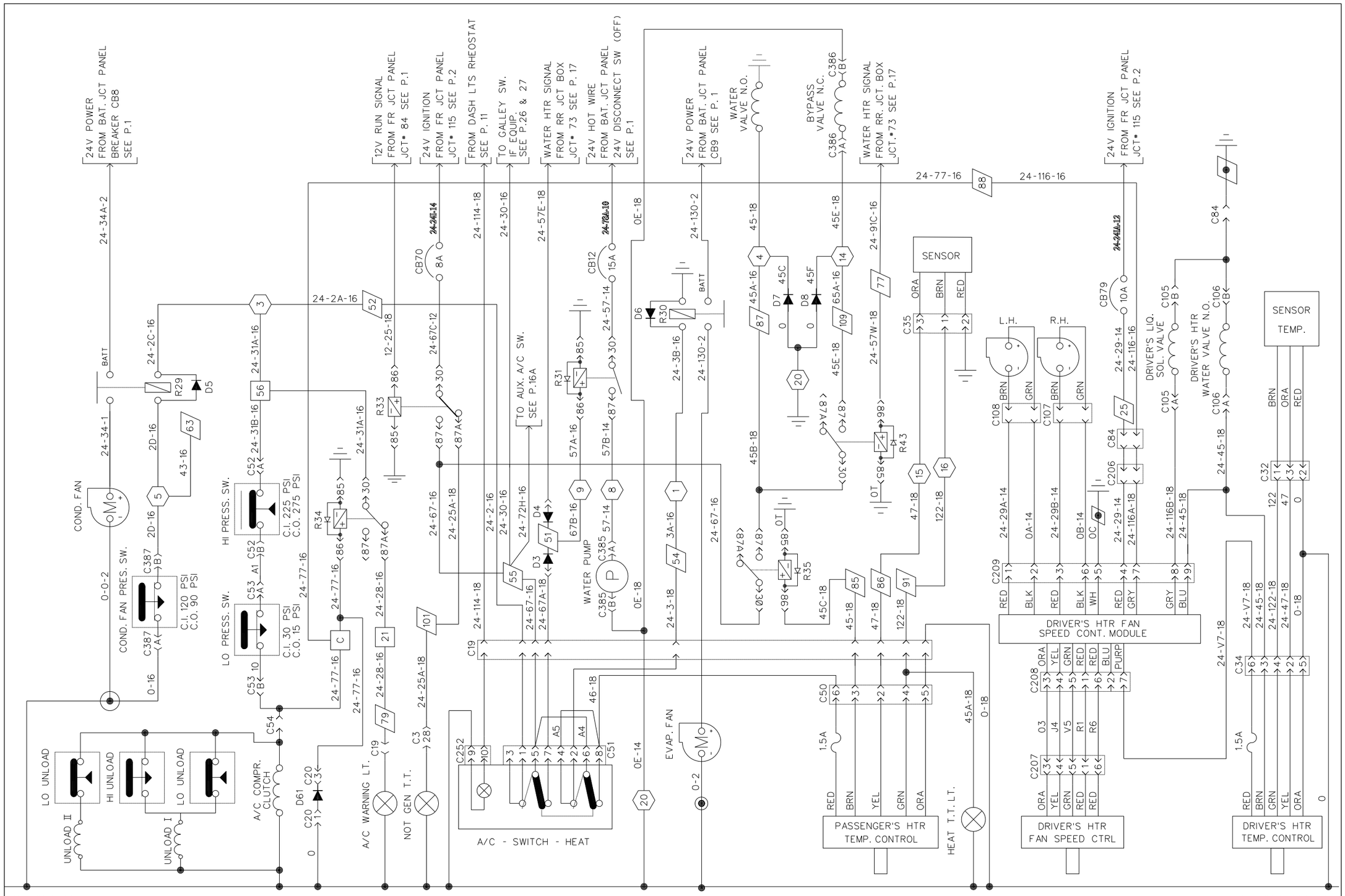

A/C AND HEAT SYSTEM

PREVOST CAR inc.	WIRING DIAGRAM	NO: D060871	P. 15	REVISION 000

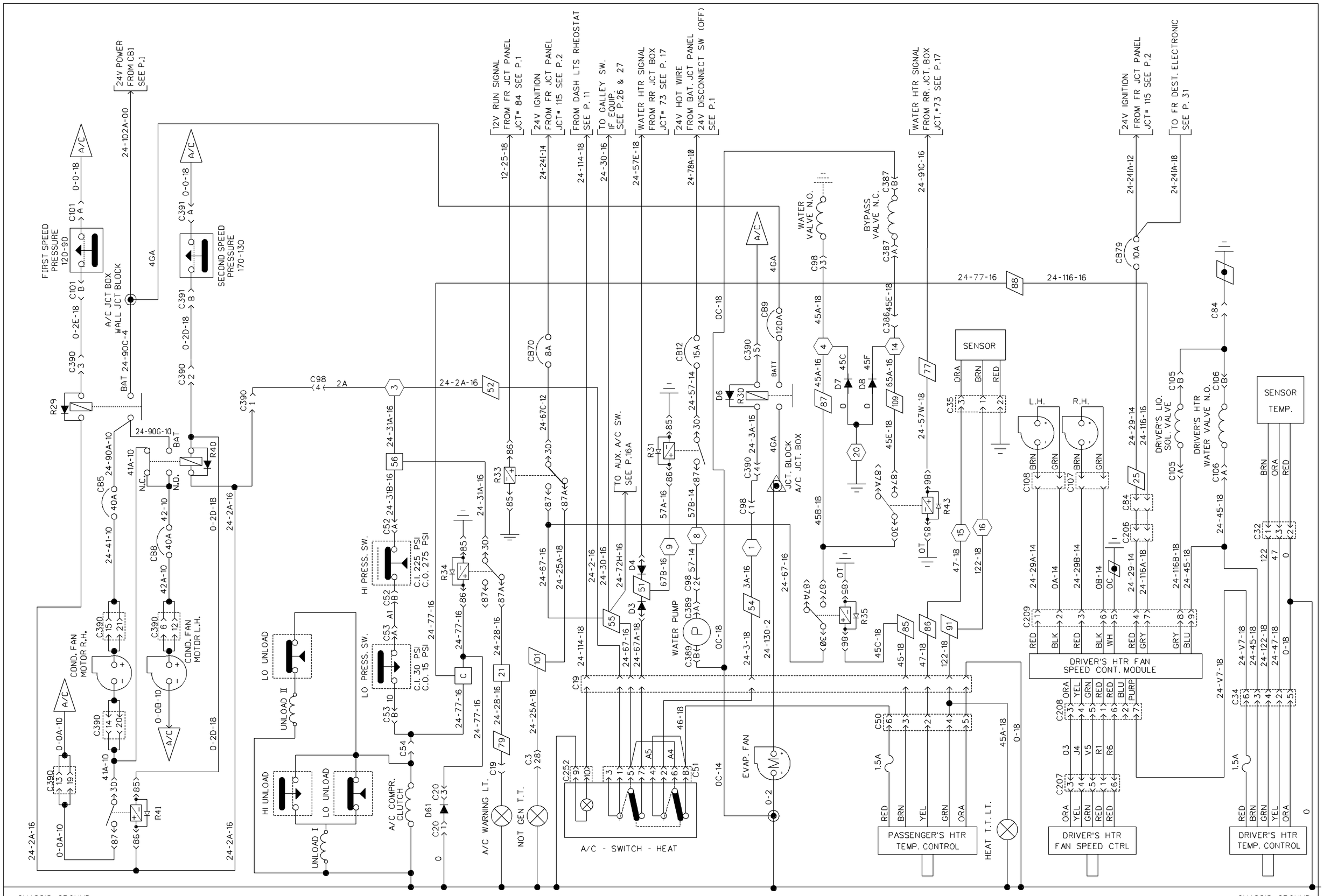

A/C AND HEAT SYSTEM

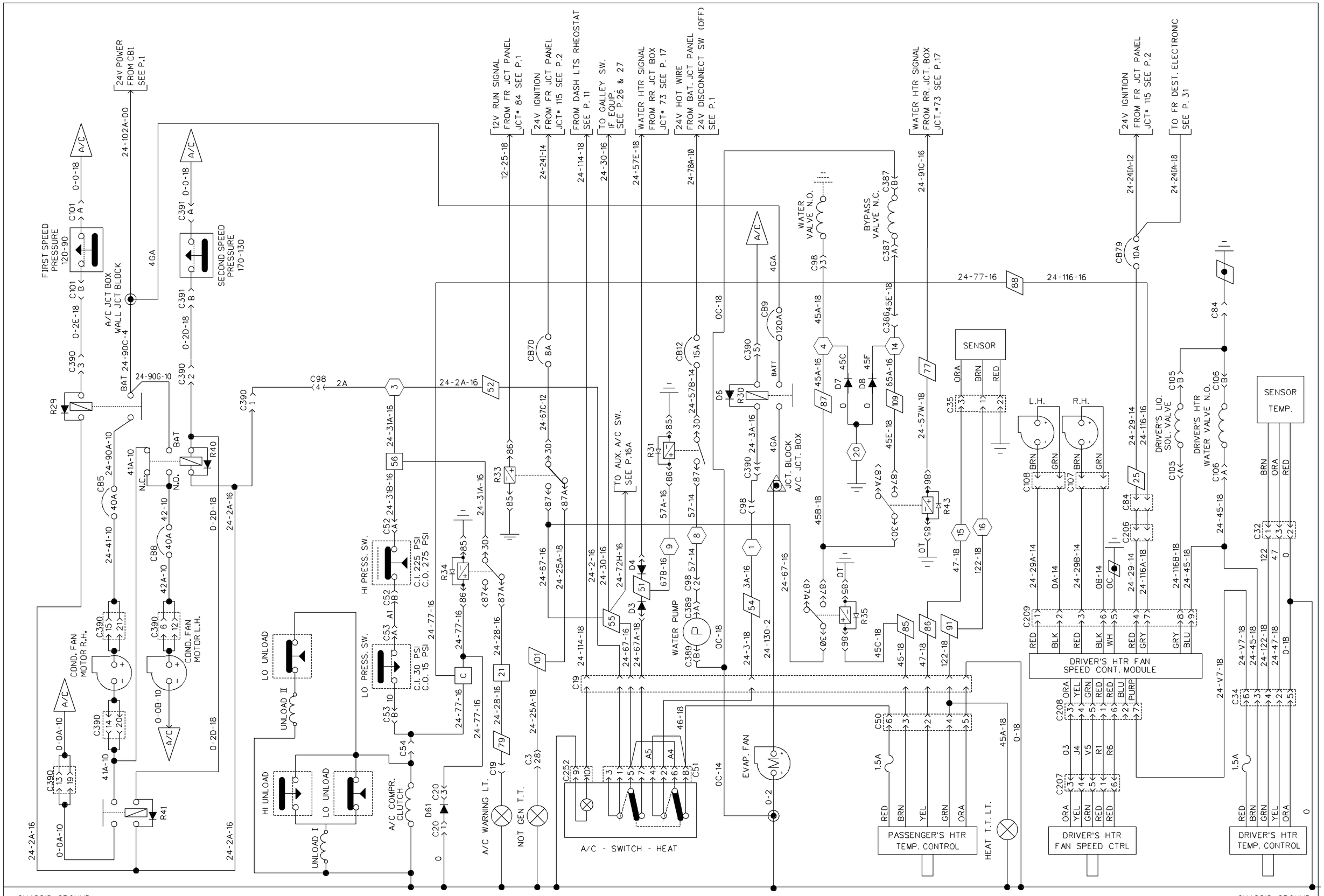

A/C AND HEAT SYSTEM

PREVOST CAR inc. | WIRING DIAGRAM | NO: D060871 | P. 15 | REVISION 023

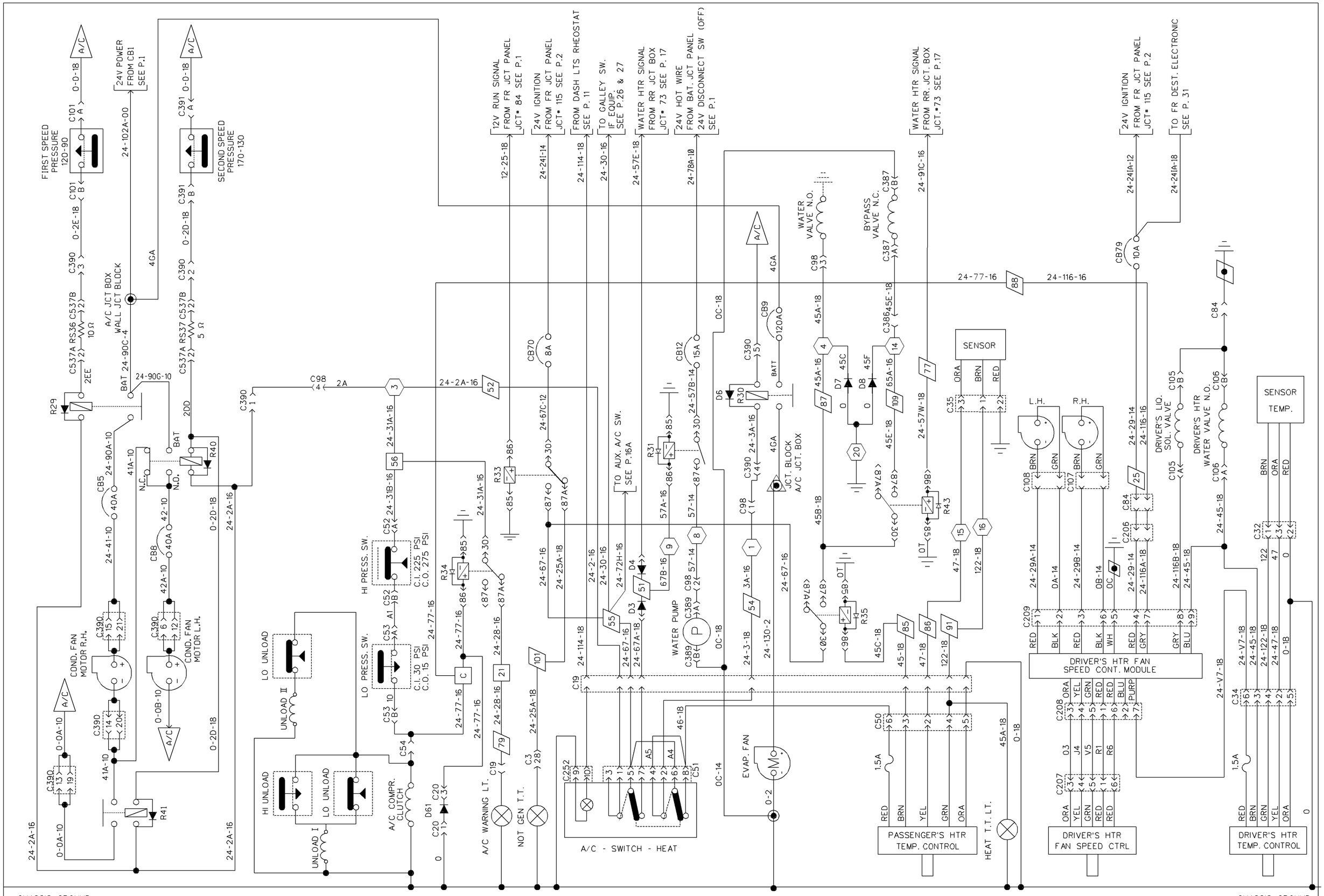

A/C AND HEAT SYSTEM

PREVOST CAR inc. | WIRING DIAGRAM | NO: D060871 | P. 15 | REVISION 024

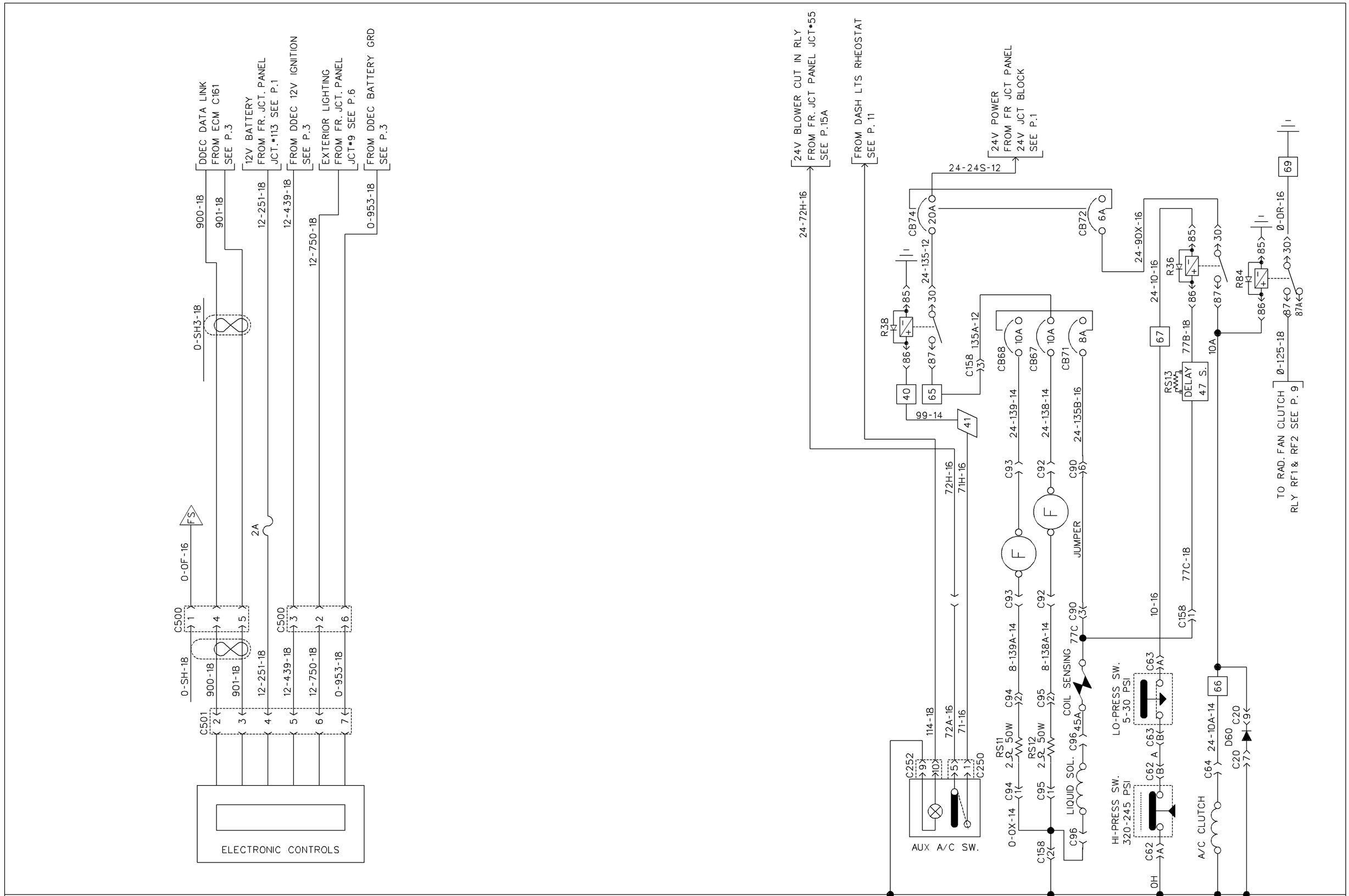

PRODRIVER | AUXILIARY A/C SYSTEM

PREVOST CAR inc.	WIRING DIAGRAM	NO: D060871	P. 16	REVISION 025

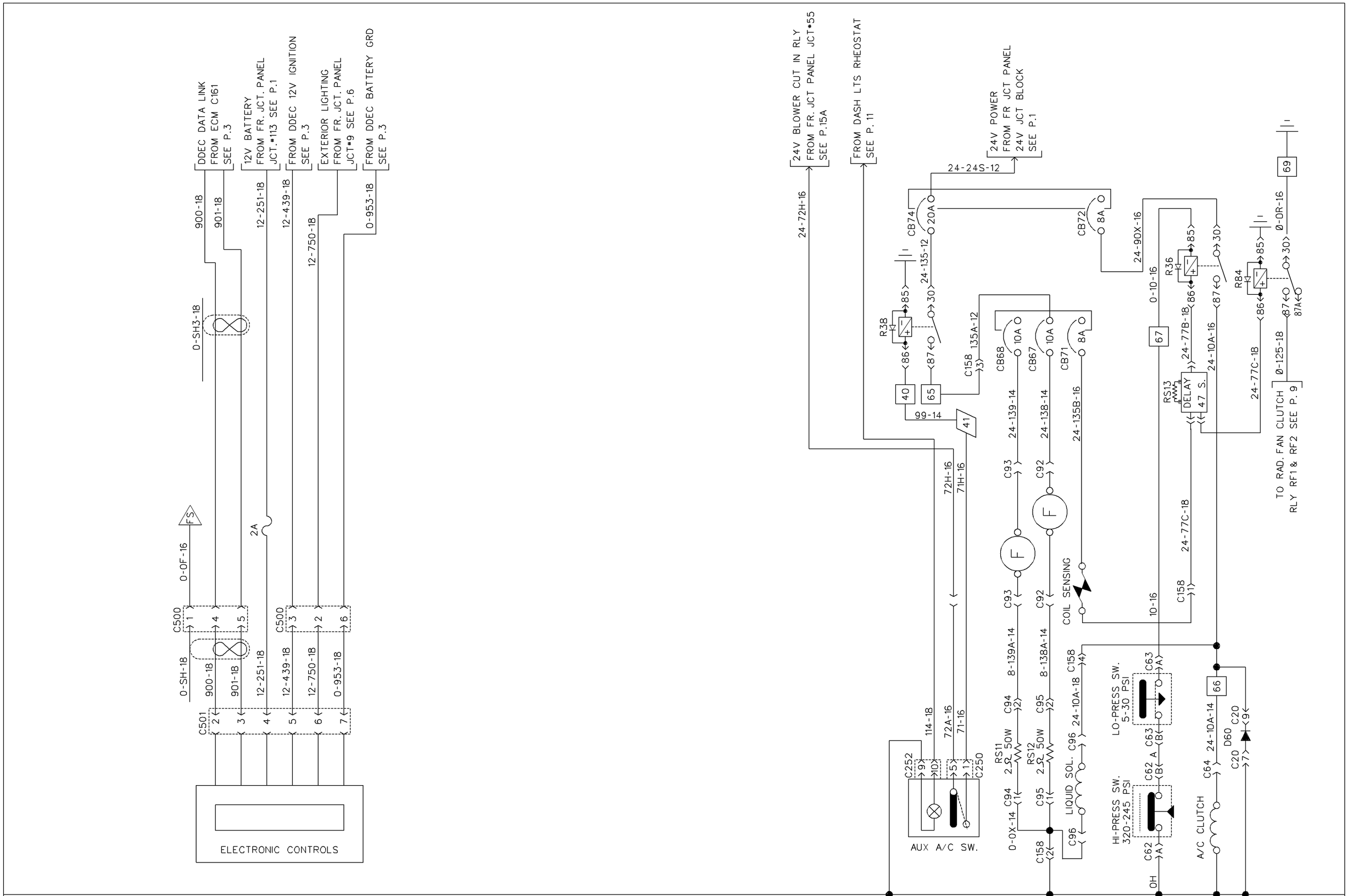

PRODRIVER

AUXILIARY A/C SYSTEM

PREVOST CAR inc.	WIRING DIAGRAM	NO: D060871	P. 16	REVISION 026

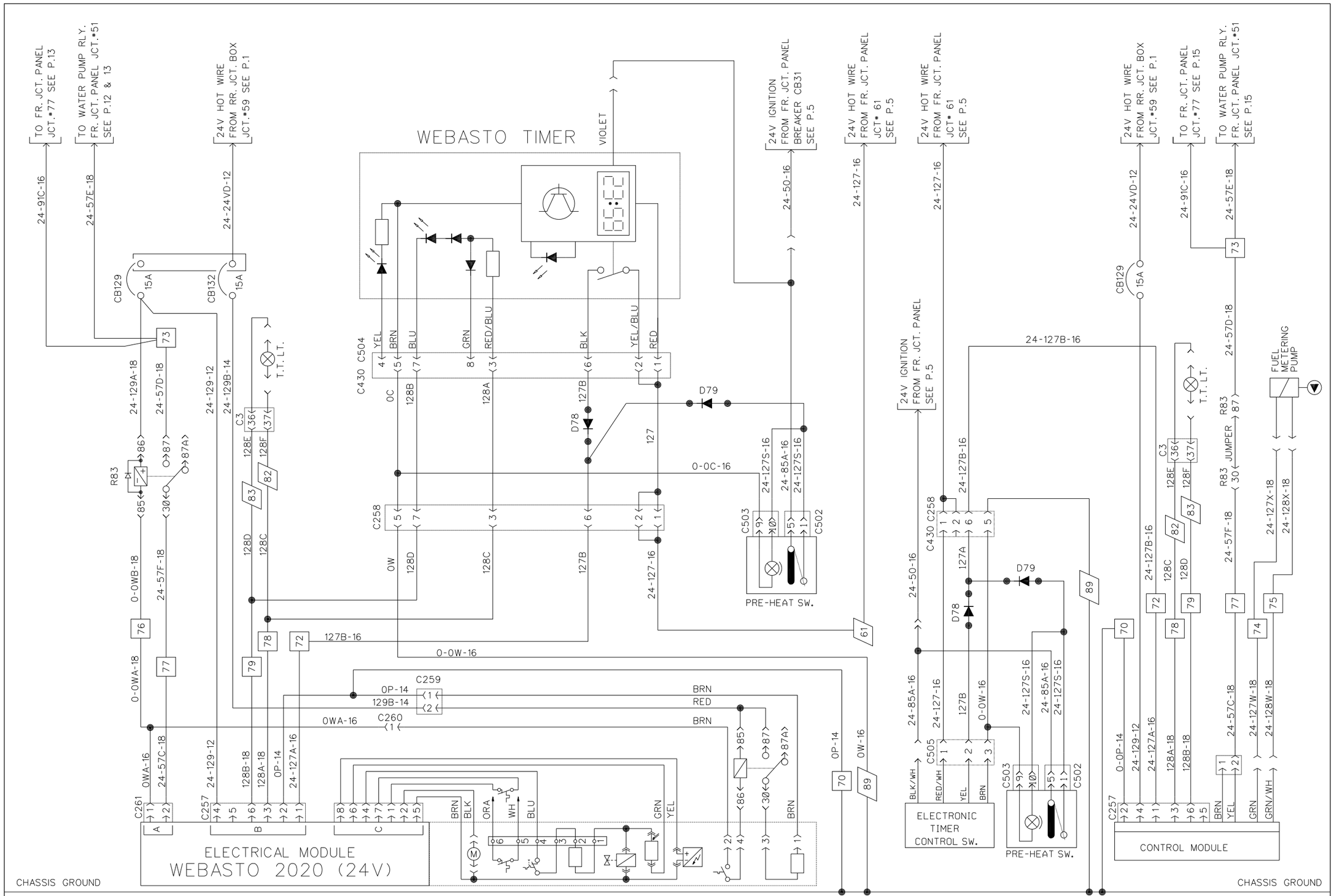

PRE-HEAT WATER HEATER WEBASTO 2020 | PRE-HEAT WATER HEATER ESPAR

PREVOST CAR inc.	WIRING DIAGRAM	NO: D060871	P. 17	REVISION 000

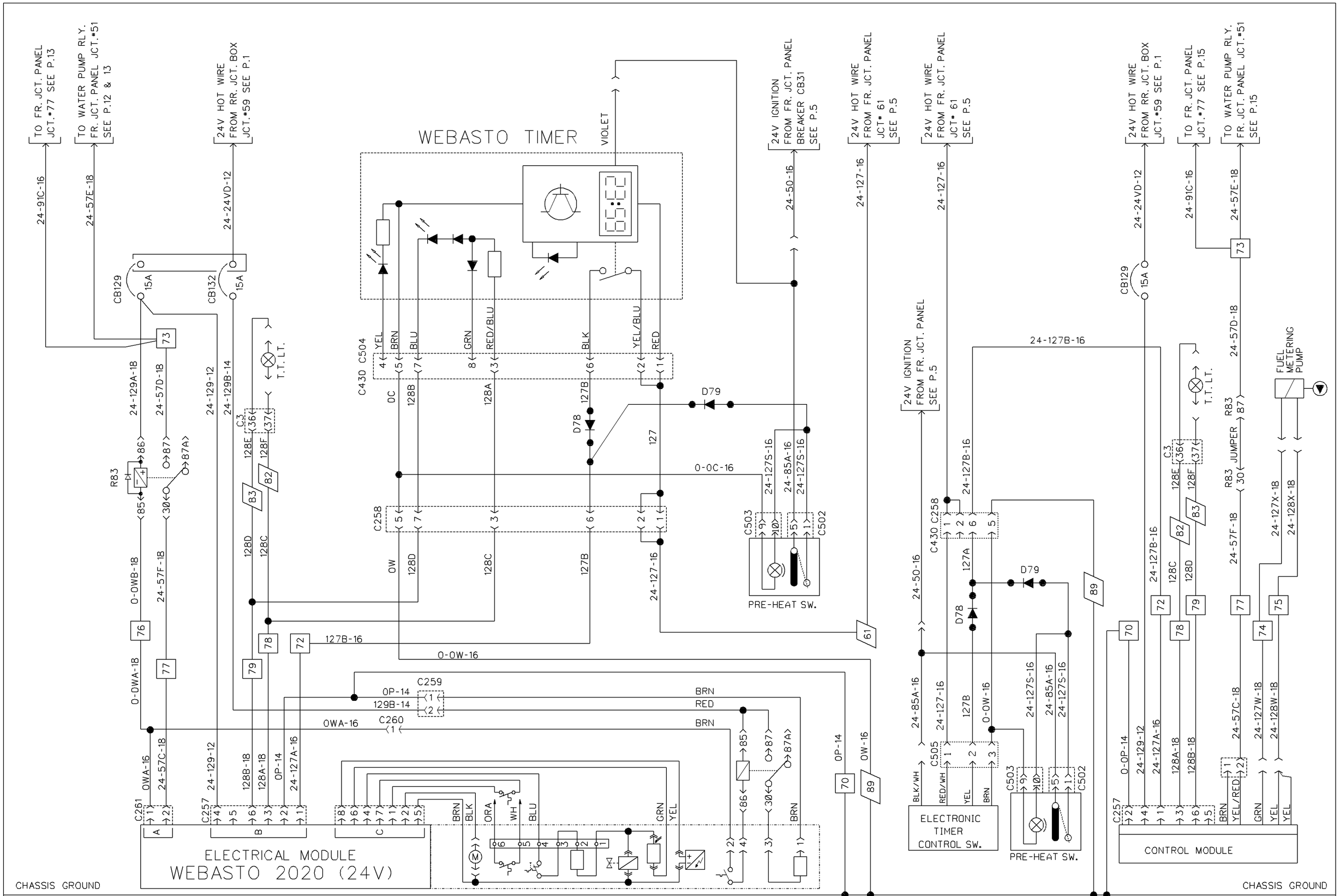

PRE-HEAT WATER HEATER WEBASTO 2020 | PRE-HEAT WATER HEATER ESPAR

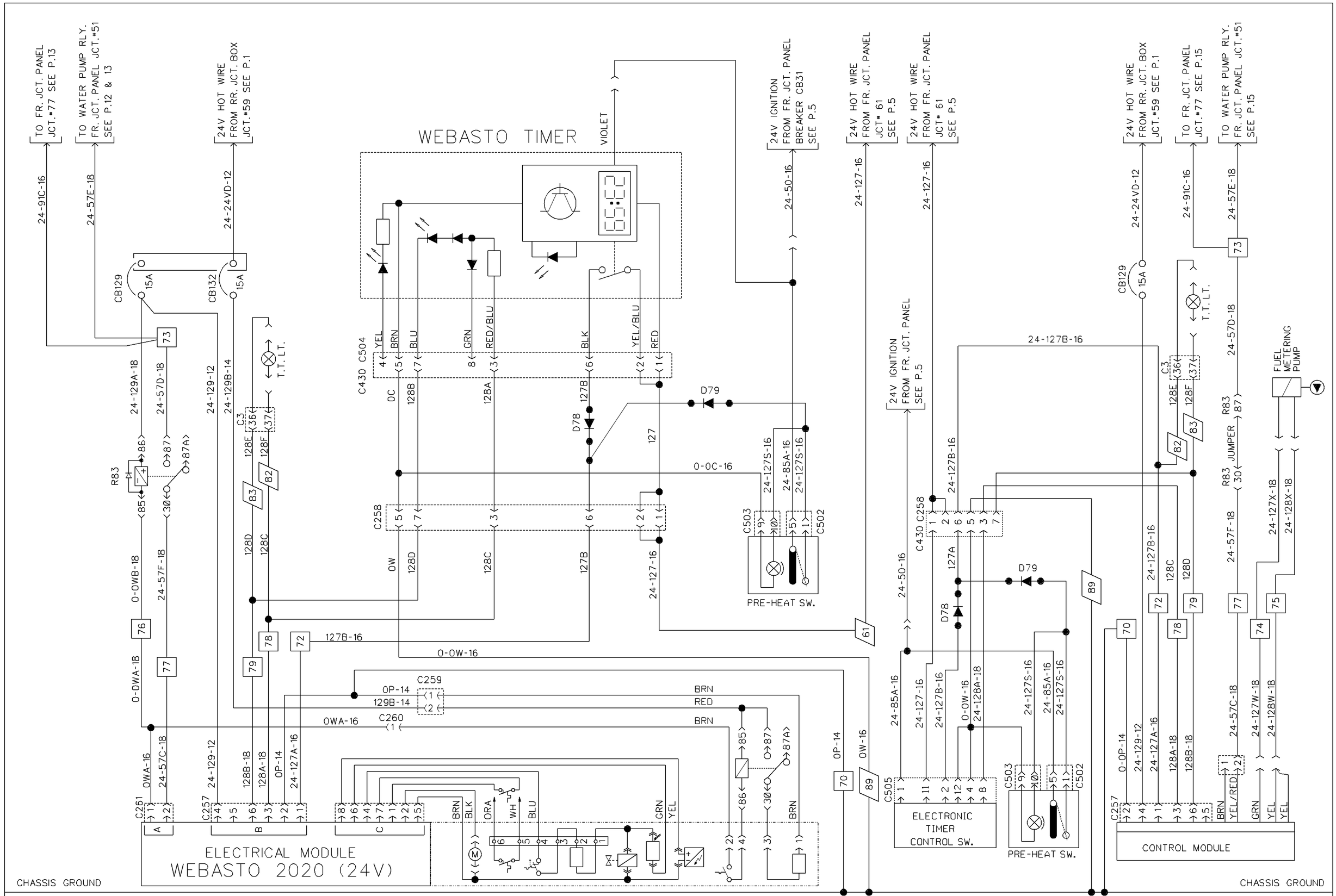

PRE-HEAT WATER HEATER WEBASTO 2020 | PRE-HEAT WATER HEATER ESPAR

PREVOST CAR inc.	WIRING DIAGRAM	NO: D060871	P. 17	REVISION 016

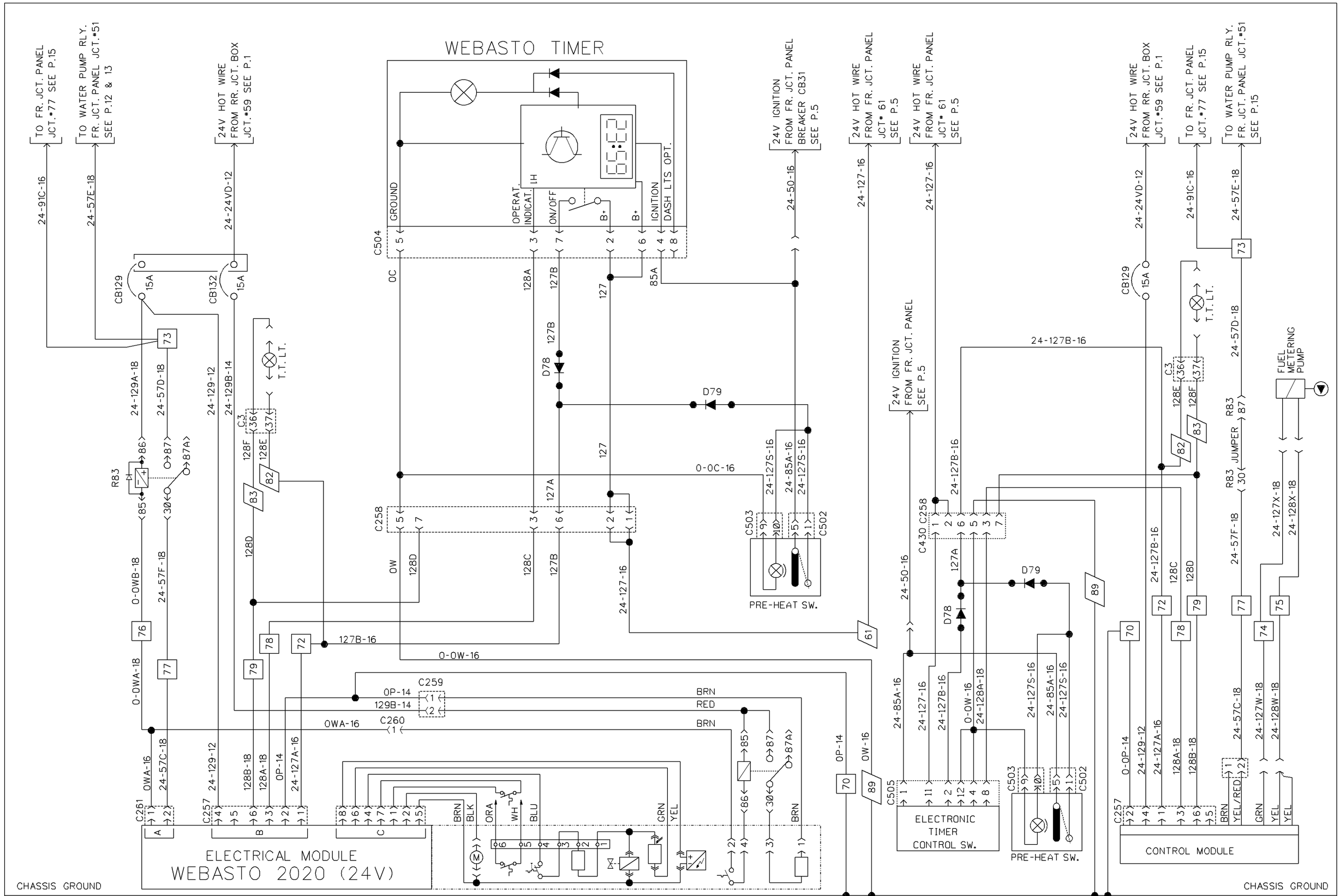

PRE-HEAT WATER HEATER WEBASTO 2020 | PRE-HEAT WATER HEATER ESPAR

PREVOST CAR inc.	WIRING DIAGRAM	NO: D060871	P. 17	REVISION 019

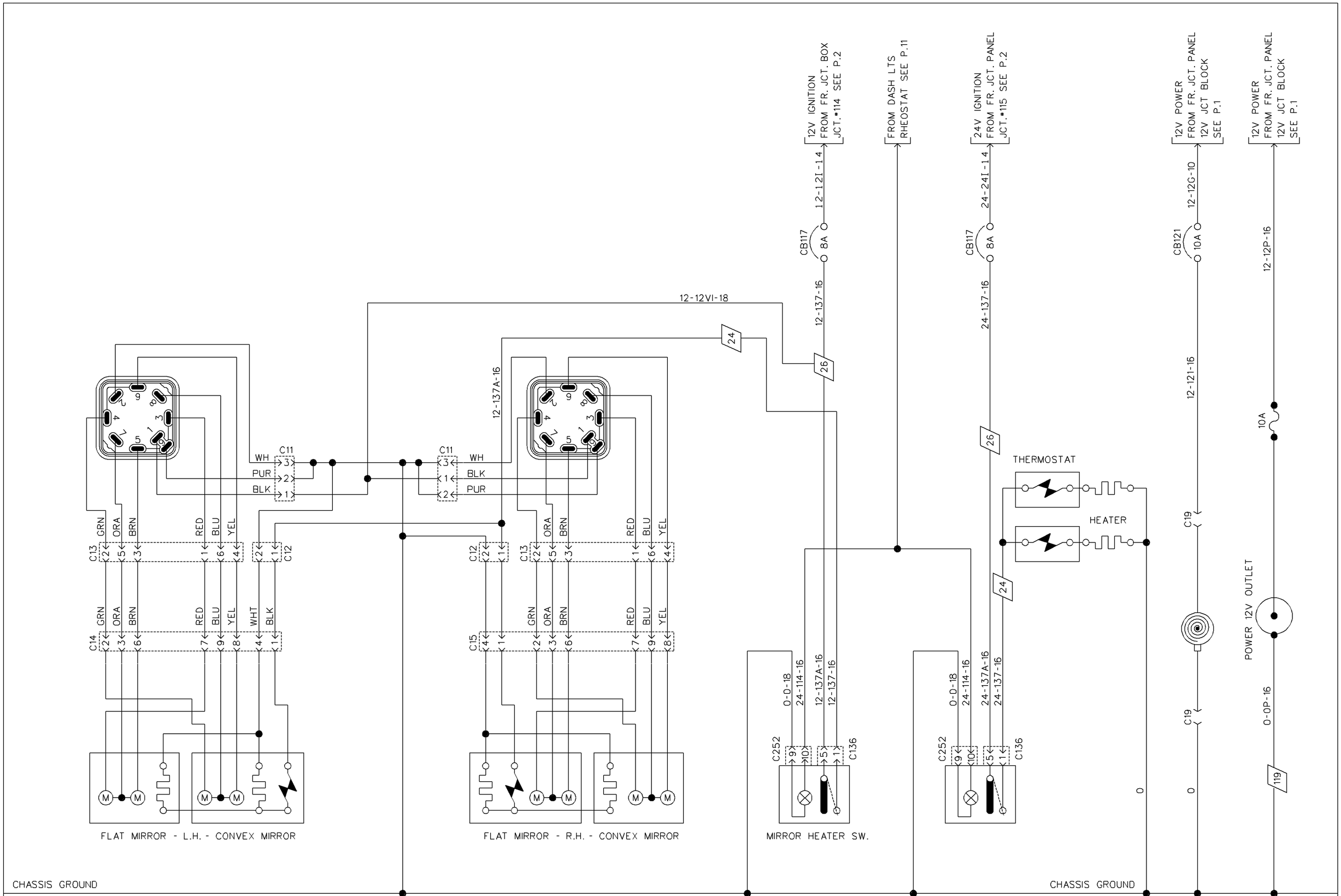

REAR VIEW MIRROR - ADJUSTMENT & HEATER SW. (RAMCO) | MIRROR (IKI) | CIGAR LIGHTER | POWER 12V OUTLET

PREVOST CAR inc.	WIRING DIAGRAM	NO: D060871	P. 18	REVISION 001

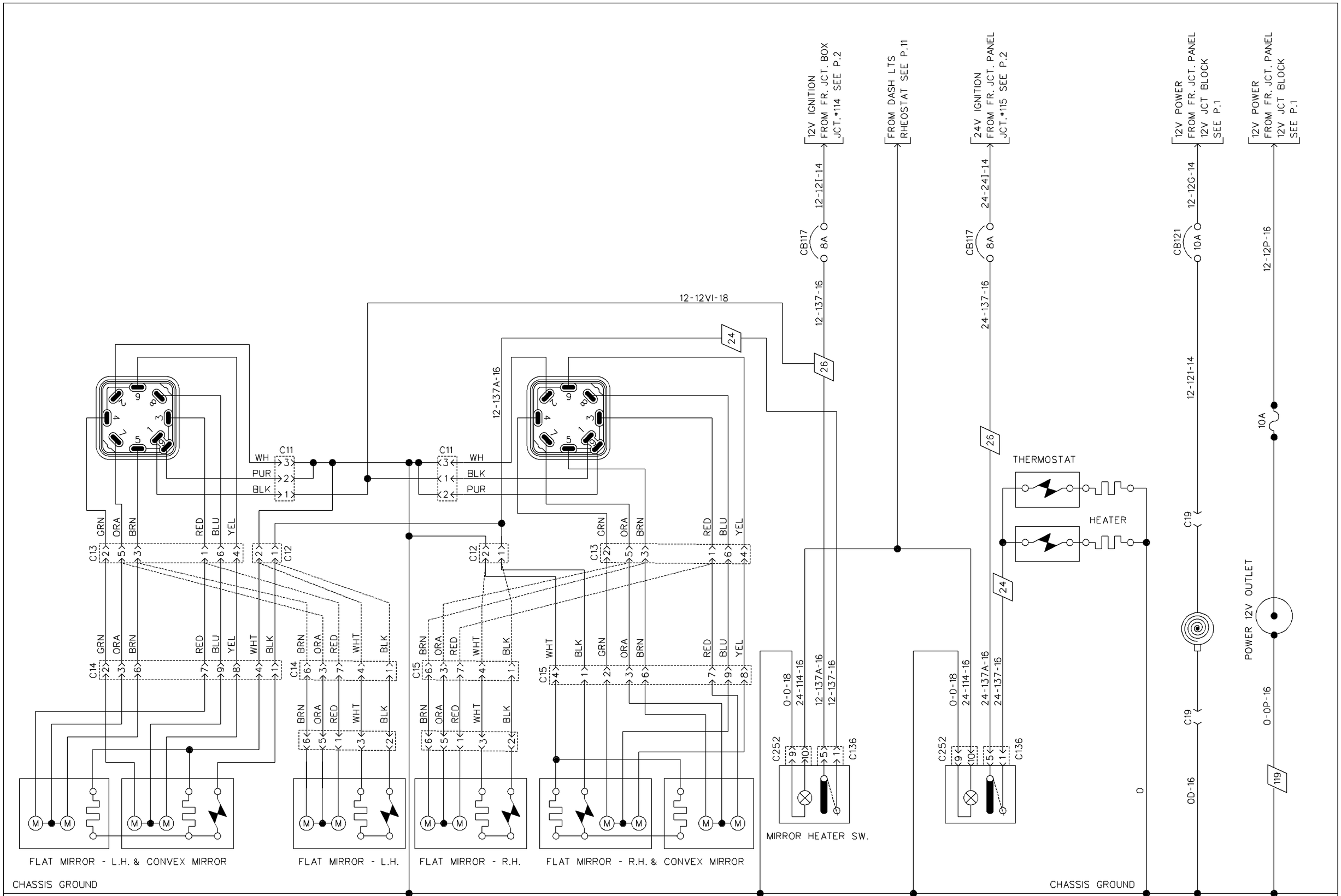

REAR VIEW MIRROR - ADJUSTMENT & HEATER SW. (RAMCO) | MIRROR (IKI) | CIGAR LIGHTER | POWER 12V OUTLET

PREVOST CAR inc.	WIRING DIAGRAM	NO: D060871	P. 18	REVISION 021

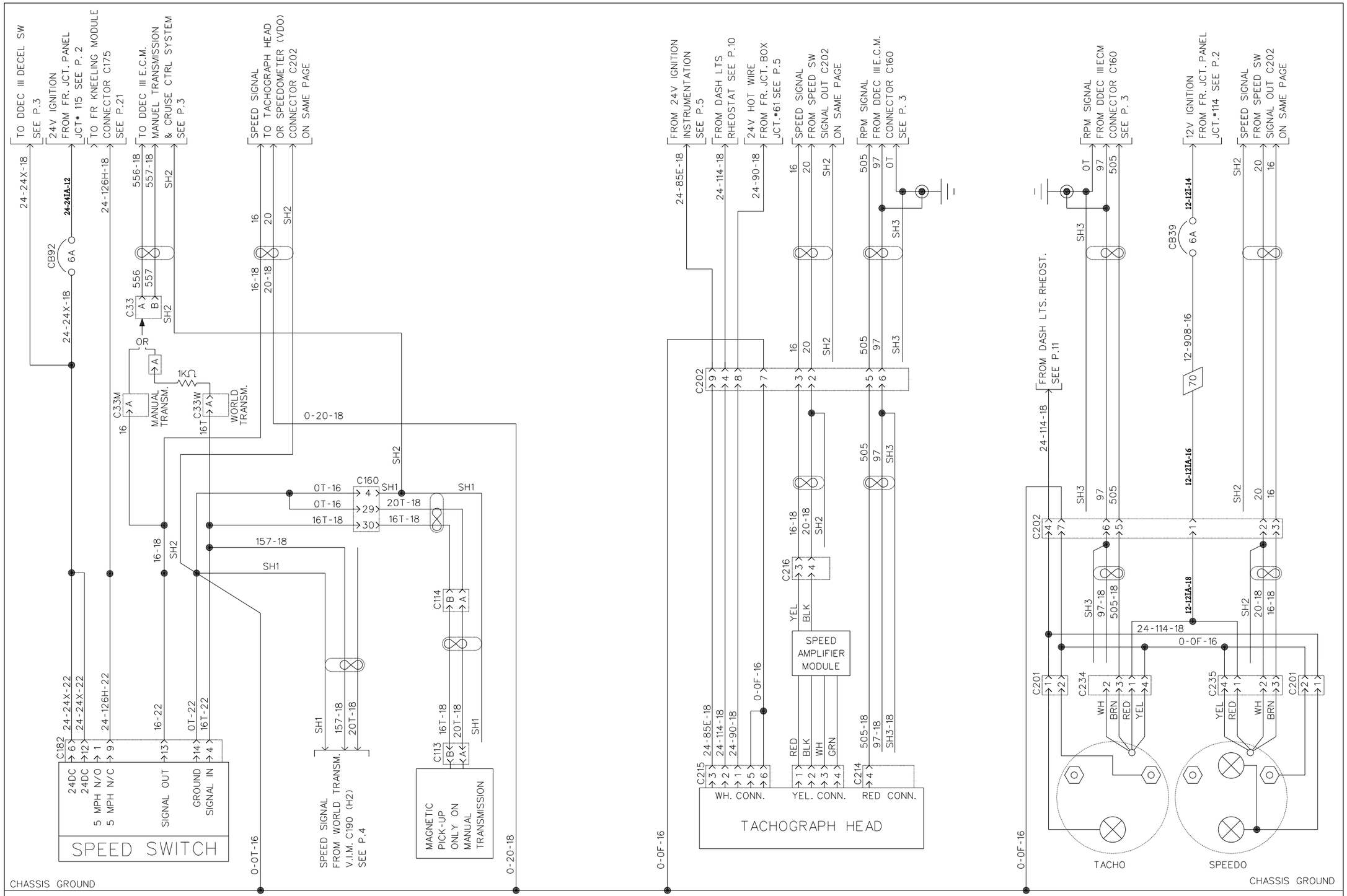

SPEED SIGNAL | ELECTRONIC TACHOGRAPH ELECT III | TACHO. & SPEEDO. VDO

PREVOST CAR inc.	WIRING DIAGRAM	NO: D060871	P. 19	REVISION 000

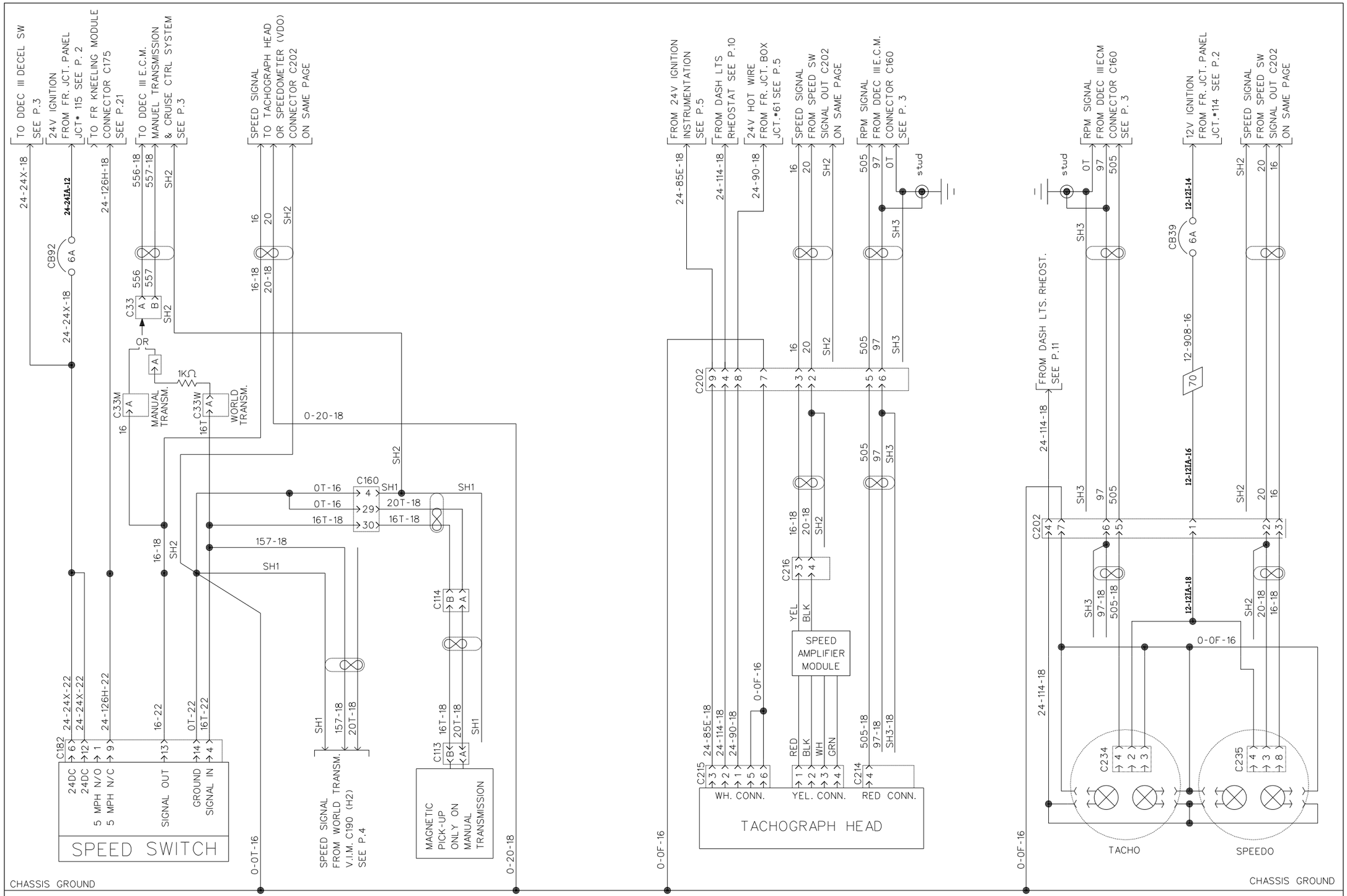

SPEED SIGNAL | ELECTRONIC TACHOGRAPH ELECT III | TACHO. & SPEEDO. VDO

PREVOST CAR inc.	WIRING DIAGRAM	NO: D060871	P. 19	REVISION 009

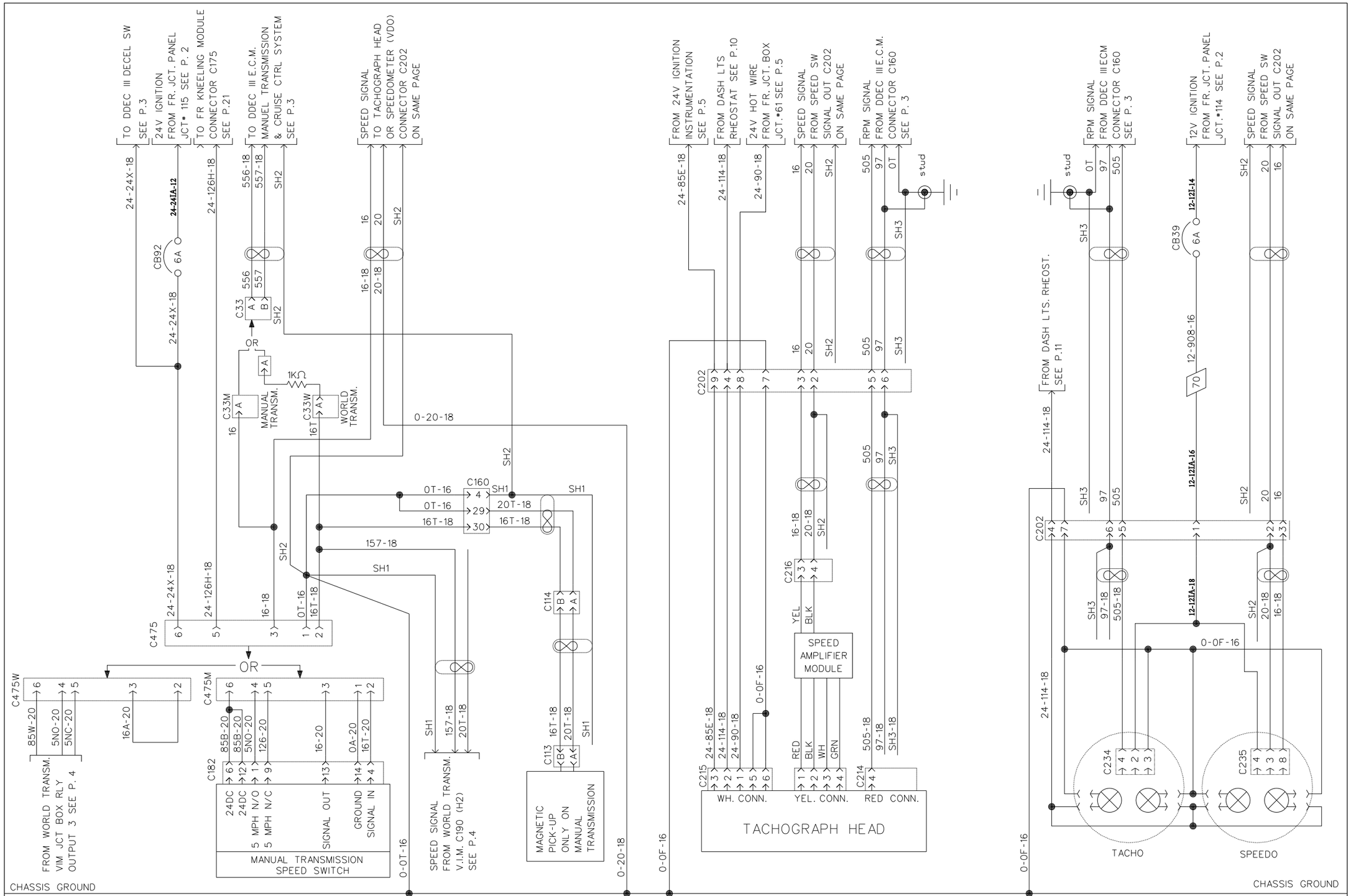

SPEED SIGNAL | ELECTRONIC TACHOGRAPH ELECT III | TACHO. & SPEEDO. VDO

PREVOST CAR inc.	WIRING DIAGRAM	NO: D060871	P. 19	REVISION 010

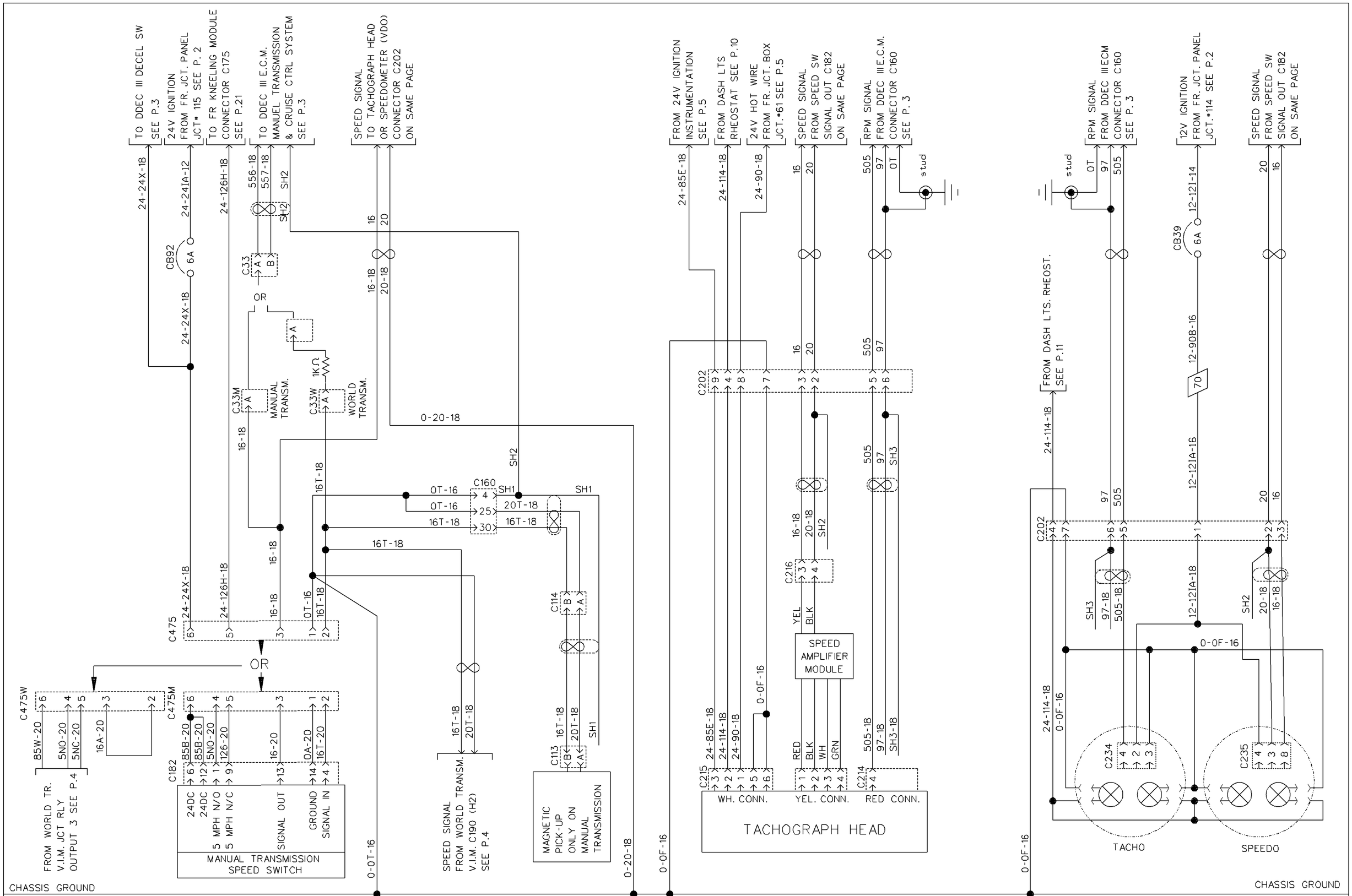

SPEED SIGNAL | ELECTRONIC TACHOGRAPH ELECT III | TACHO. & SPEEDO. VDO

PREVOST CAR inc. | WIRING DIAGRAM | NO: D060871 | P. 19 | REVISION 018

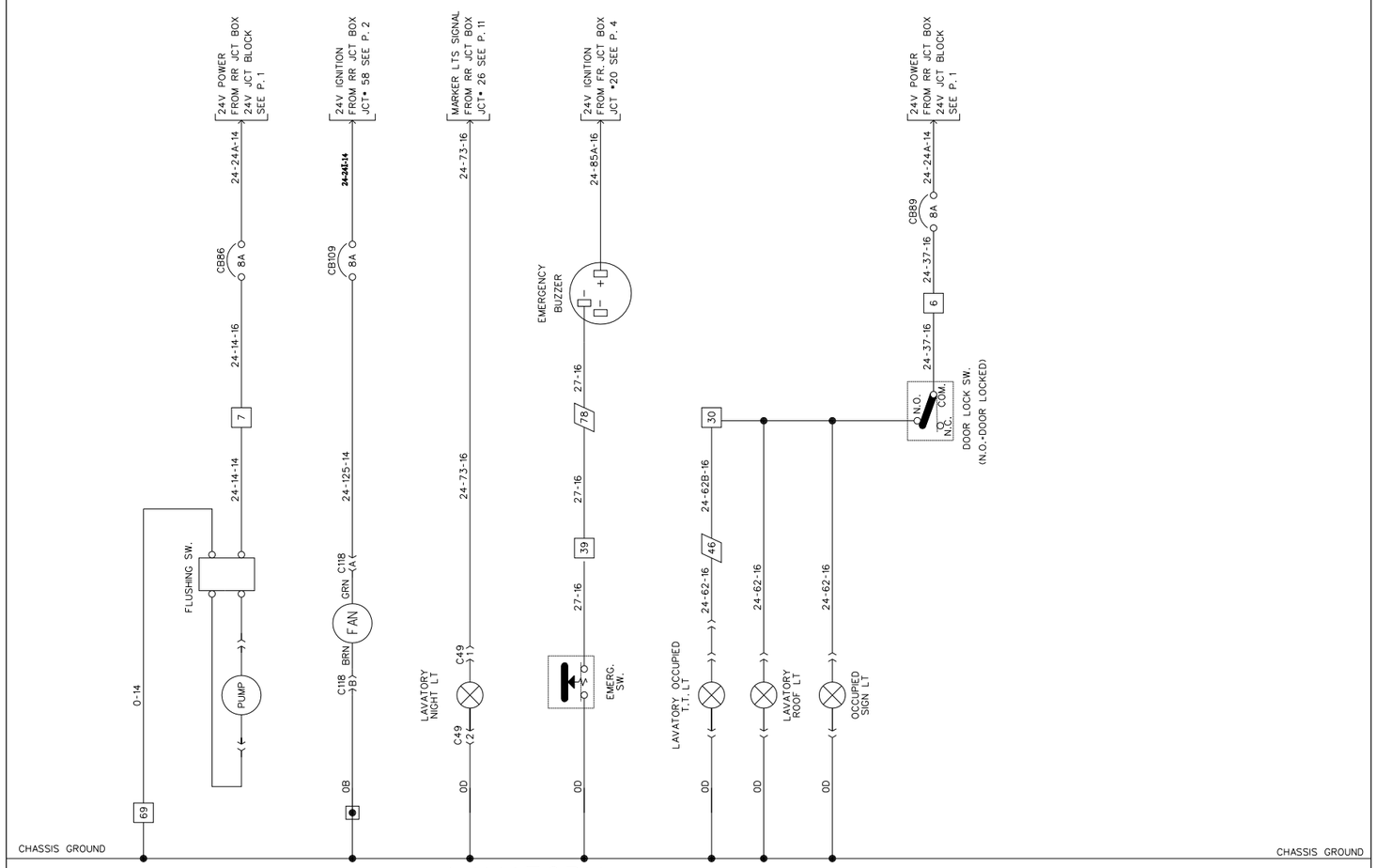

LAVATORY

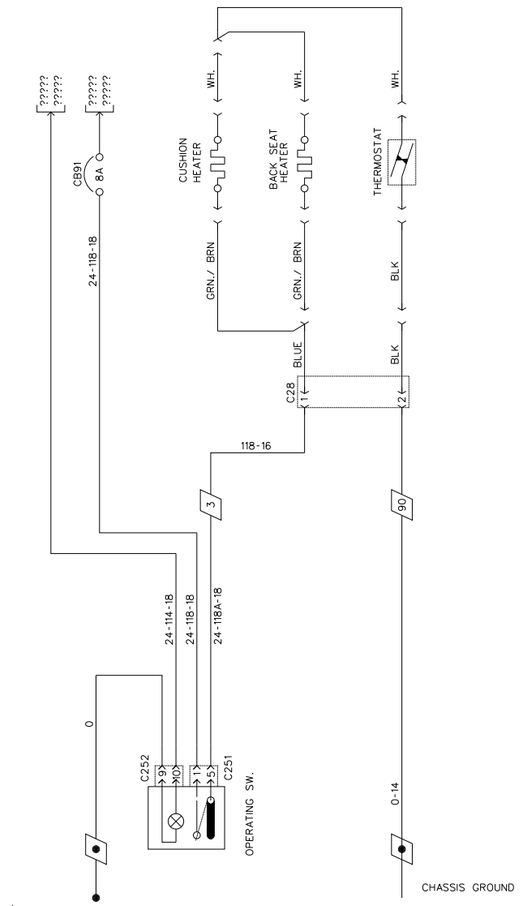

DRIVER'S SEAT HEATER

PREVOST CAR inc.	WIRING DIAGRAM	NO: D060871	P. 20	REVISION 000

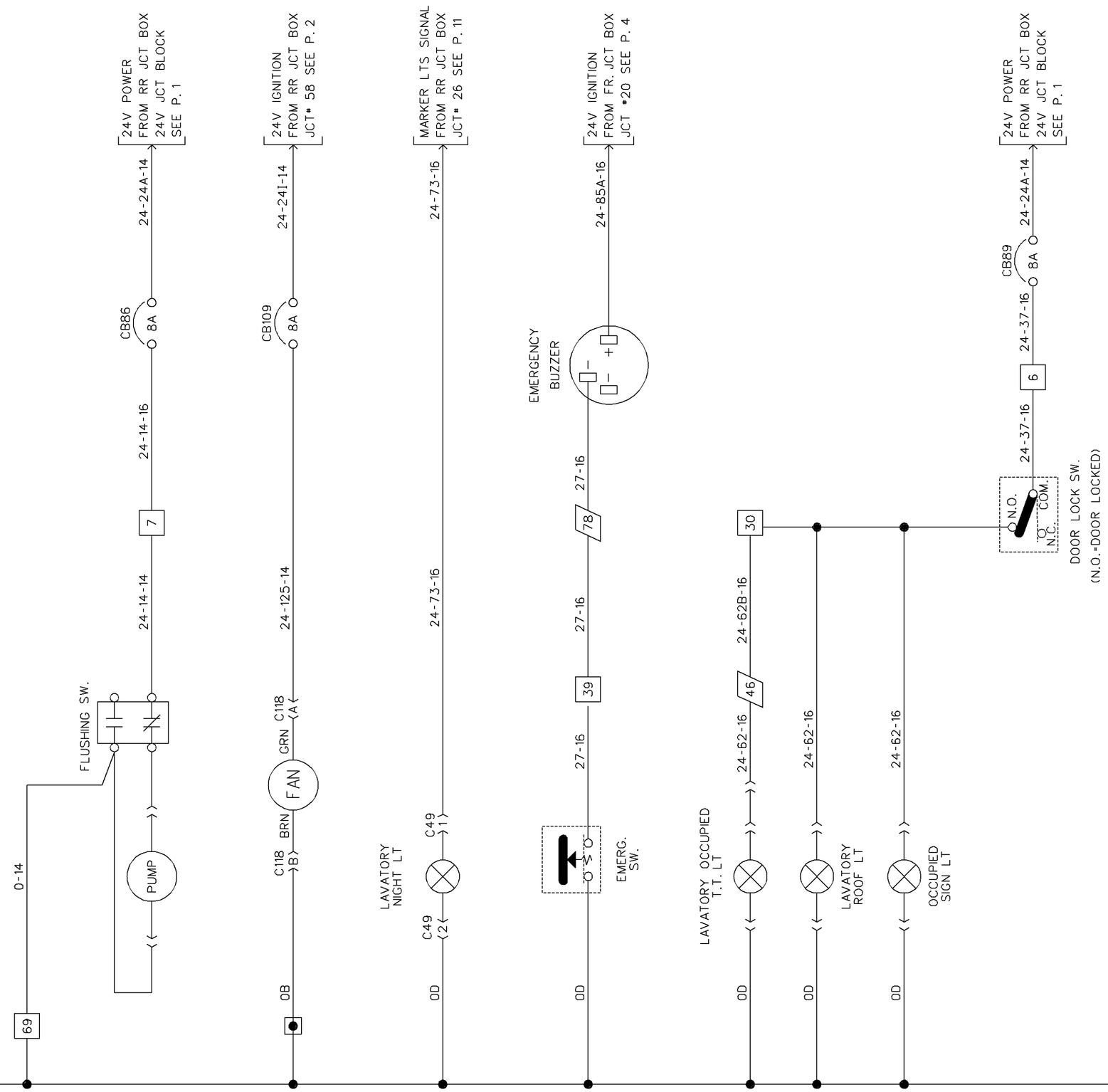

LAVATORY

PREVOST CAR inc.	WIRING DIAGRAM	NO: D060871	P. 20	REVISION 022

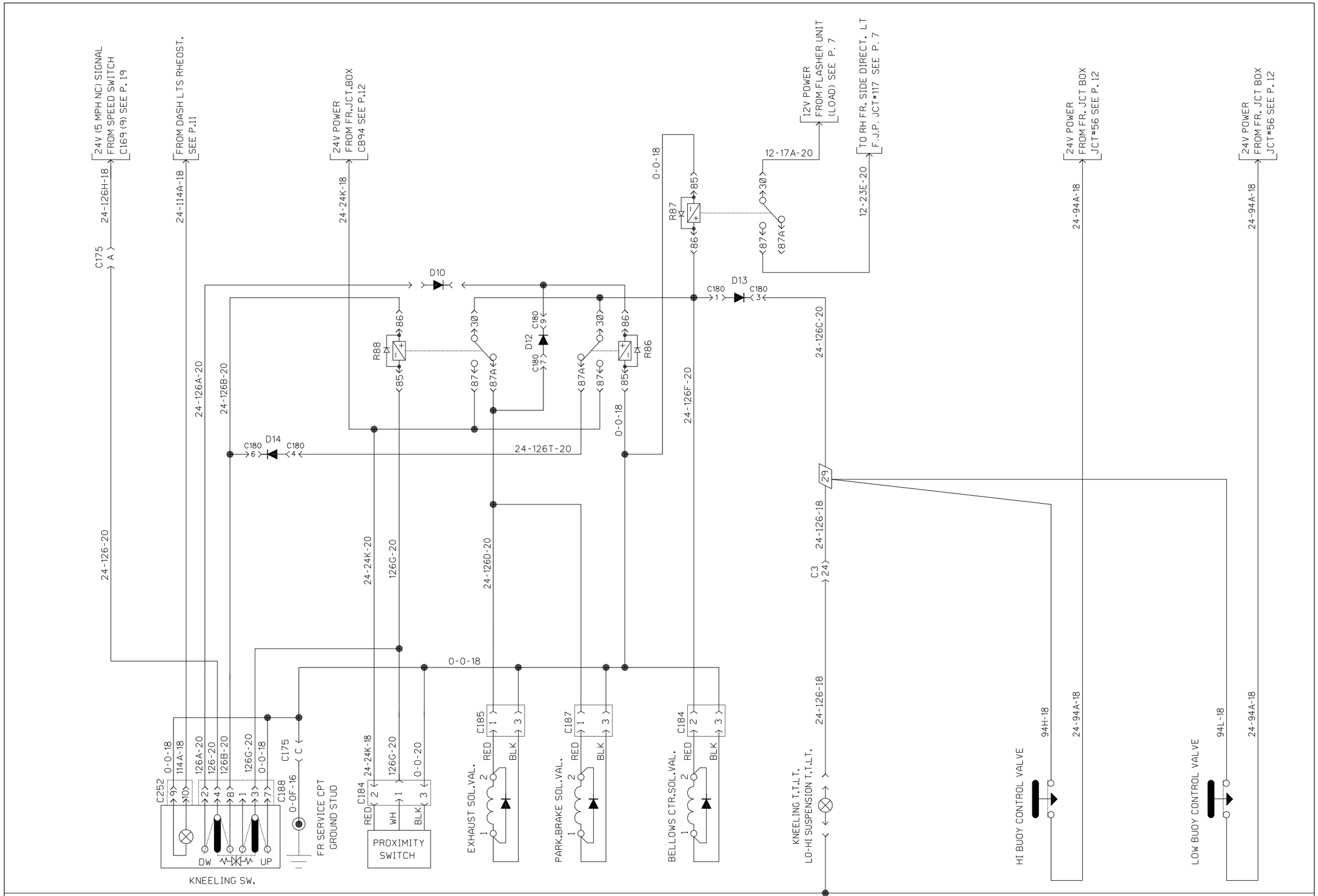

PREVOST CAR inc.	WIRING DIAGRAM	NO: D060871	P. 21 PRIOR	REVISION 000

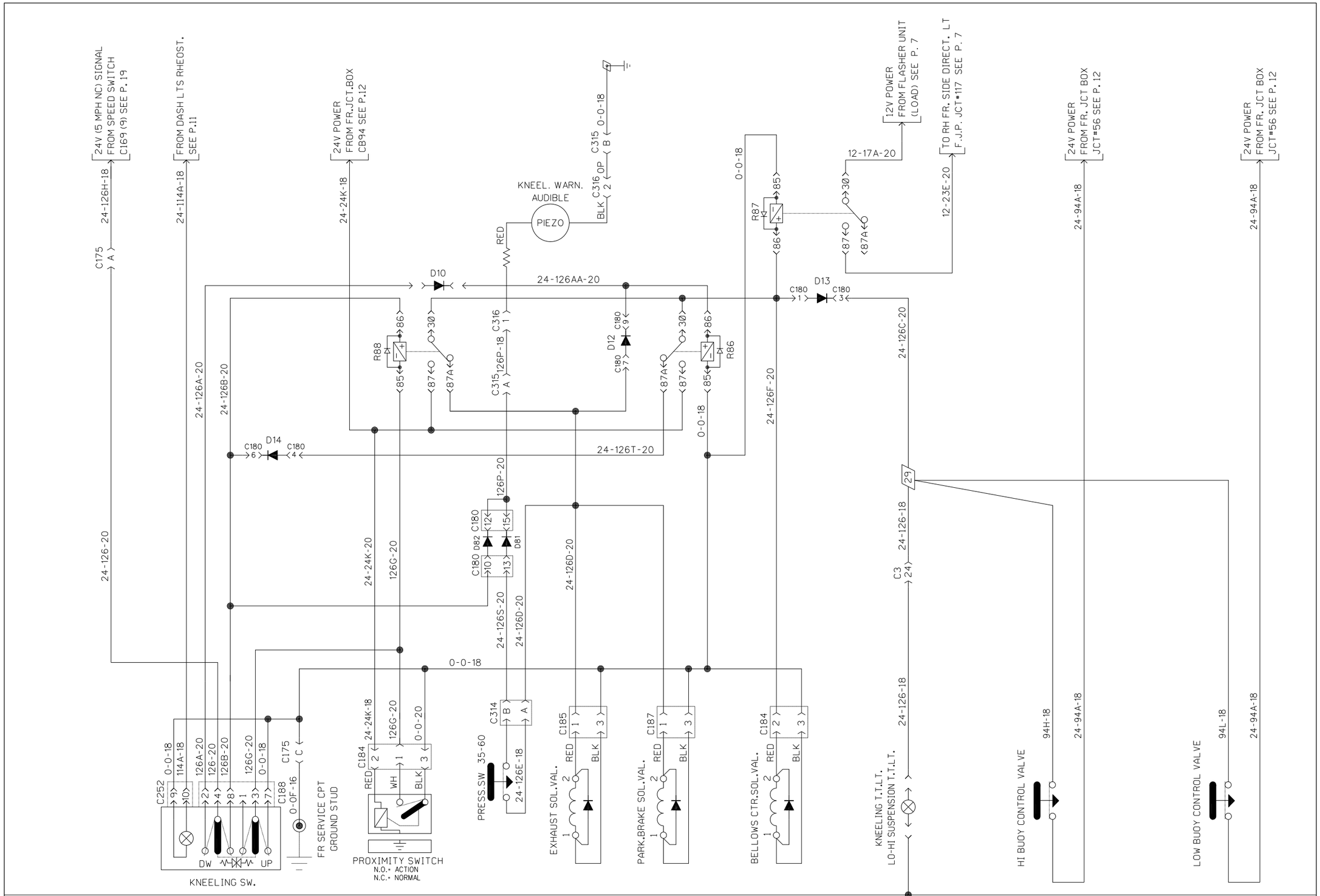

KNEELING SYSTEM | HI BUOY | LOW BUOY

PREVOST CAR inc. | WIRING DIAGRAM | NO: D060871 | P. 21 | REVISION 003

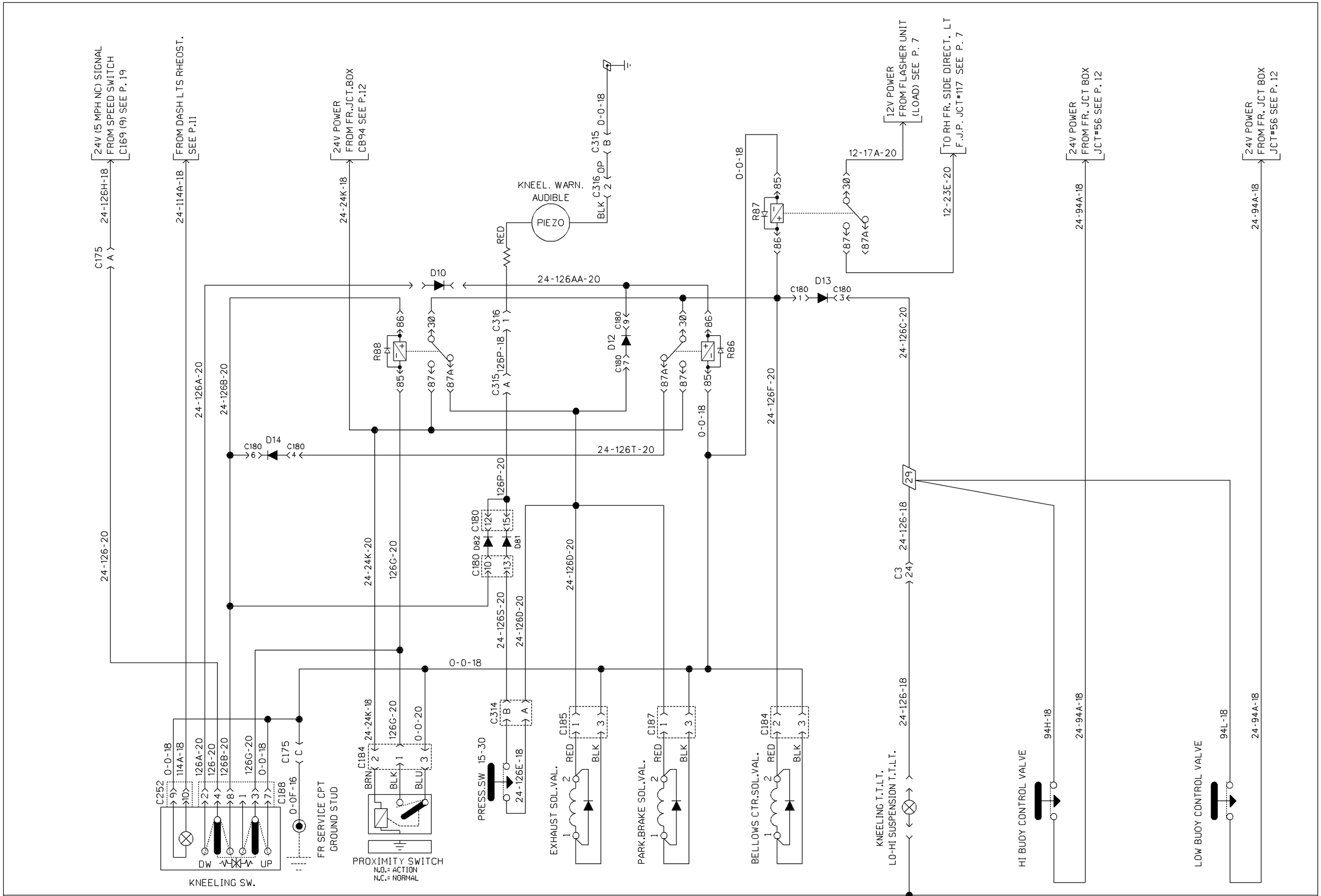

KNEELING SYSTEM | HI BUOY | LOW BUOY

PREVOST CAR inc. | WIRING DIAGRAM | NO: D060871 | P. 21 | REVISION 022

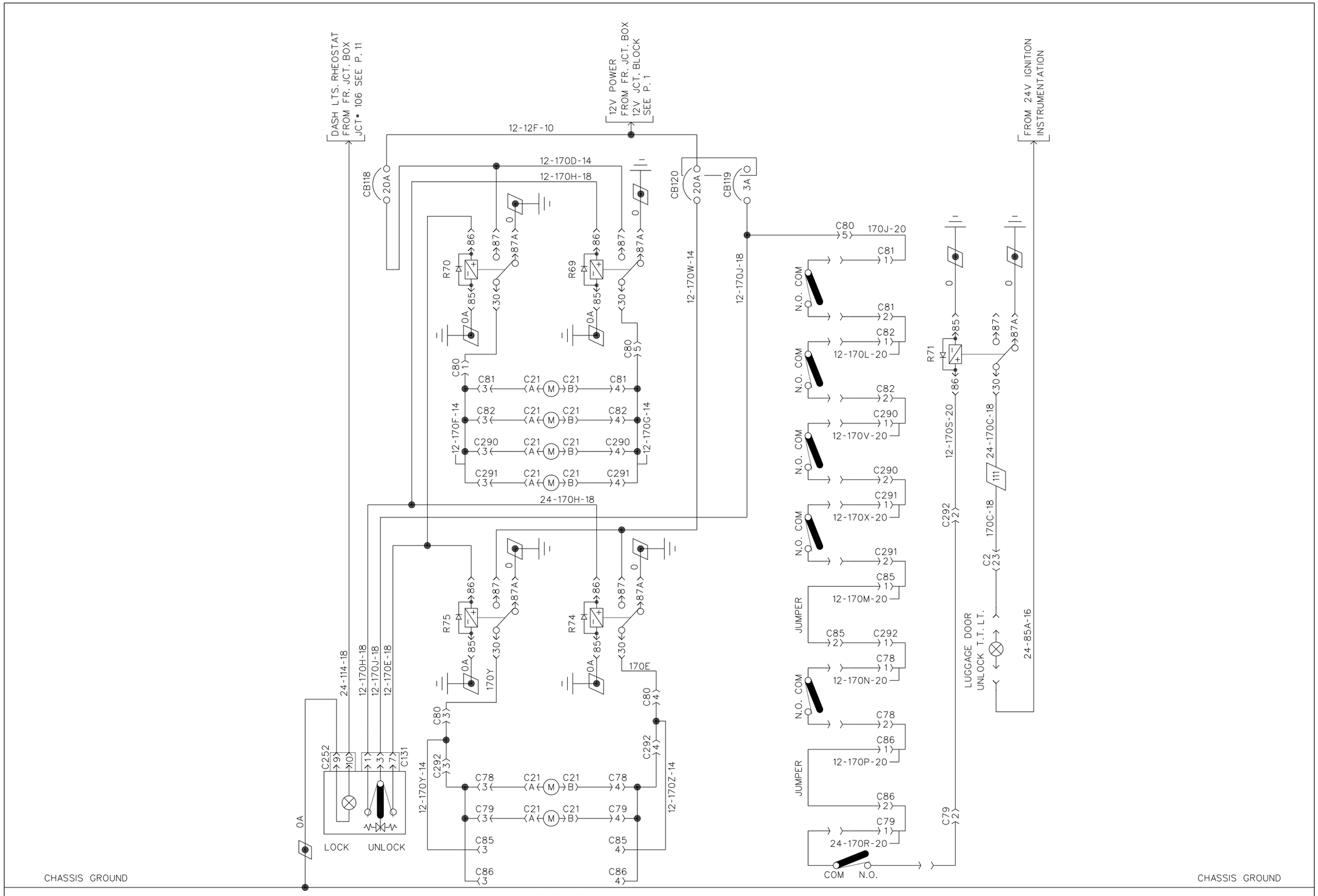

LUGGAGE DOOR LOCK.

PREVOST CAR inc.	WIRING DIAGRAM	NO: D060871	P. 22	REVISION 000

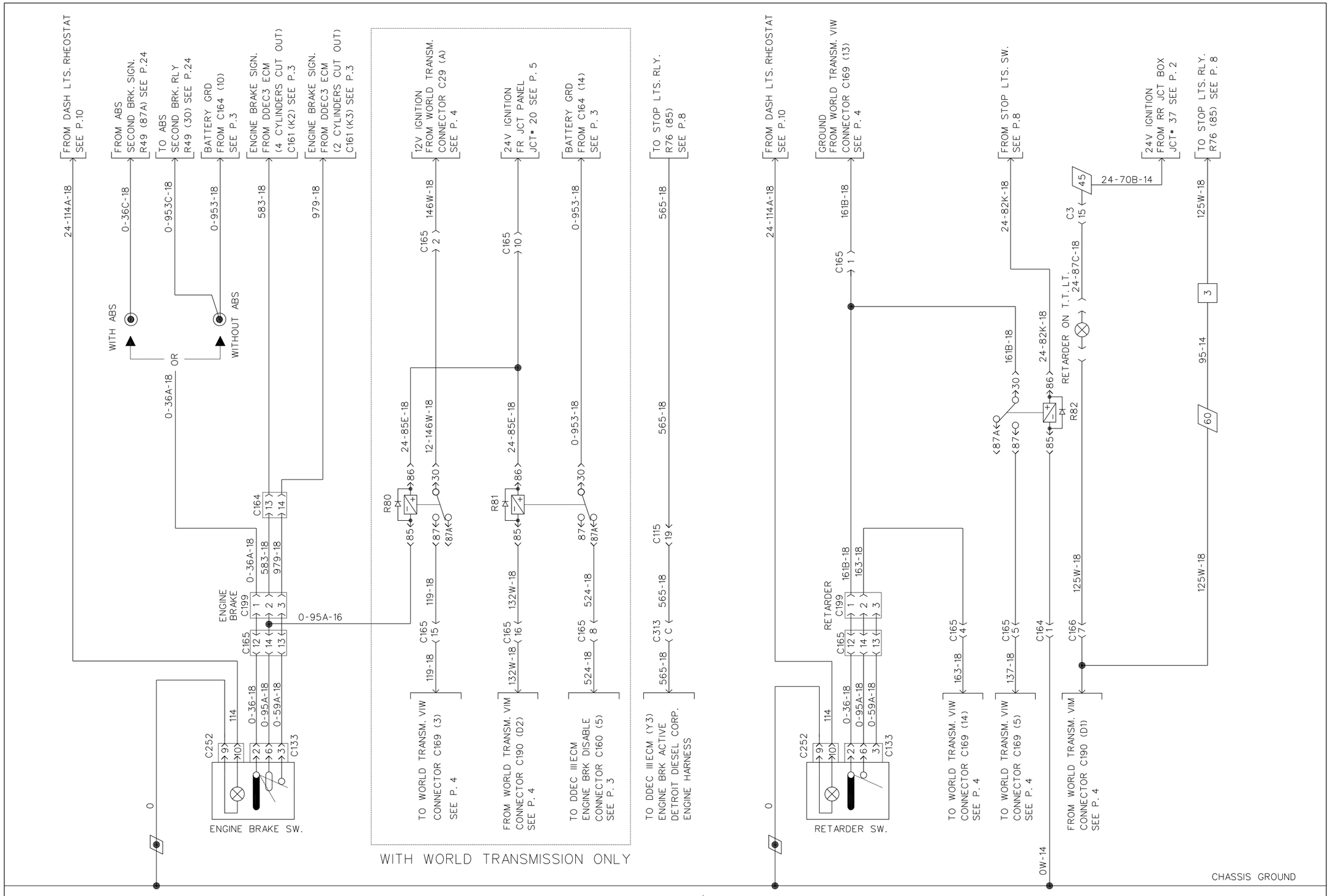

ENGINE BRAKE SYSTEM | RETARDER SYSTEM
(WORLD TRANSMISSION)

PREVOST CAR inc.	WIRING DIAGRAM	NO: D060871	P. 23	REVISION 000

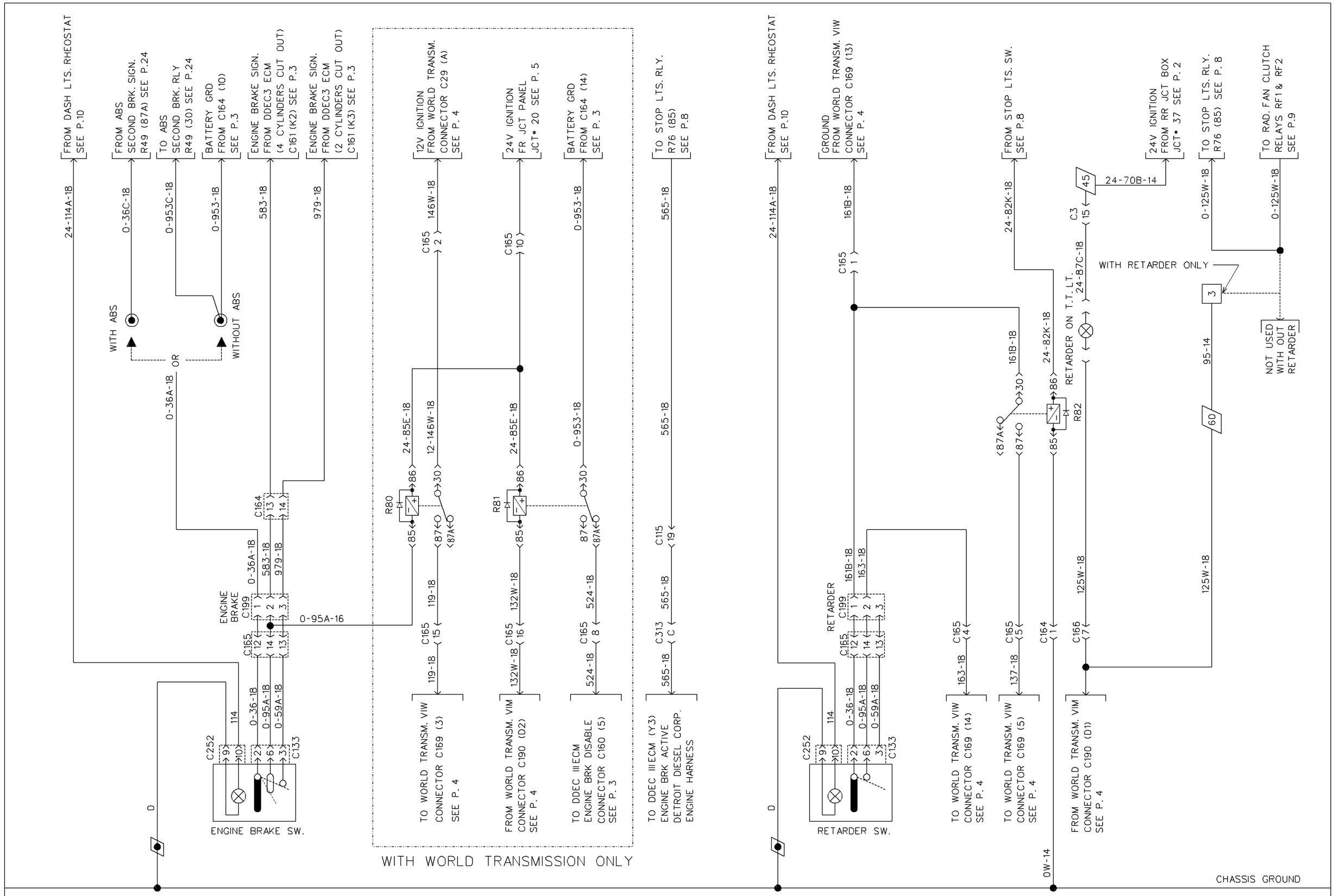

PREVOST CAR inc.	WIRING DIAGRAM	NO: D060871	P. 23	REVISION 015

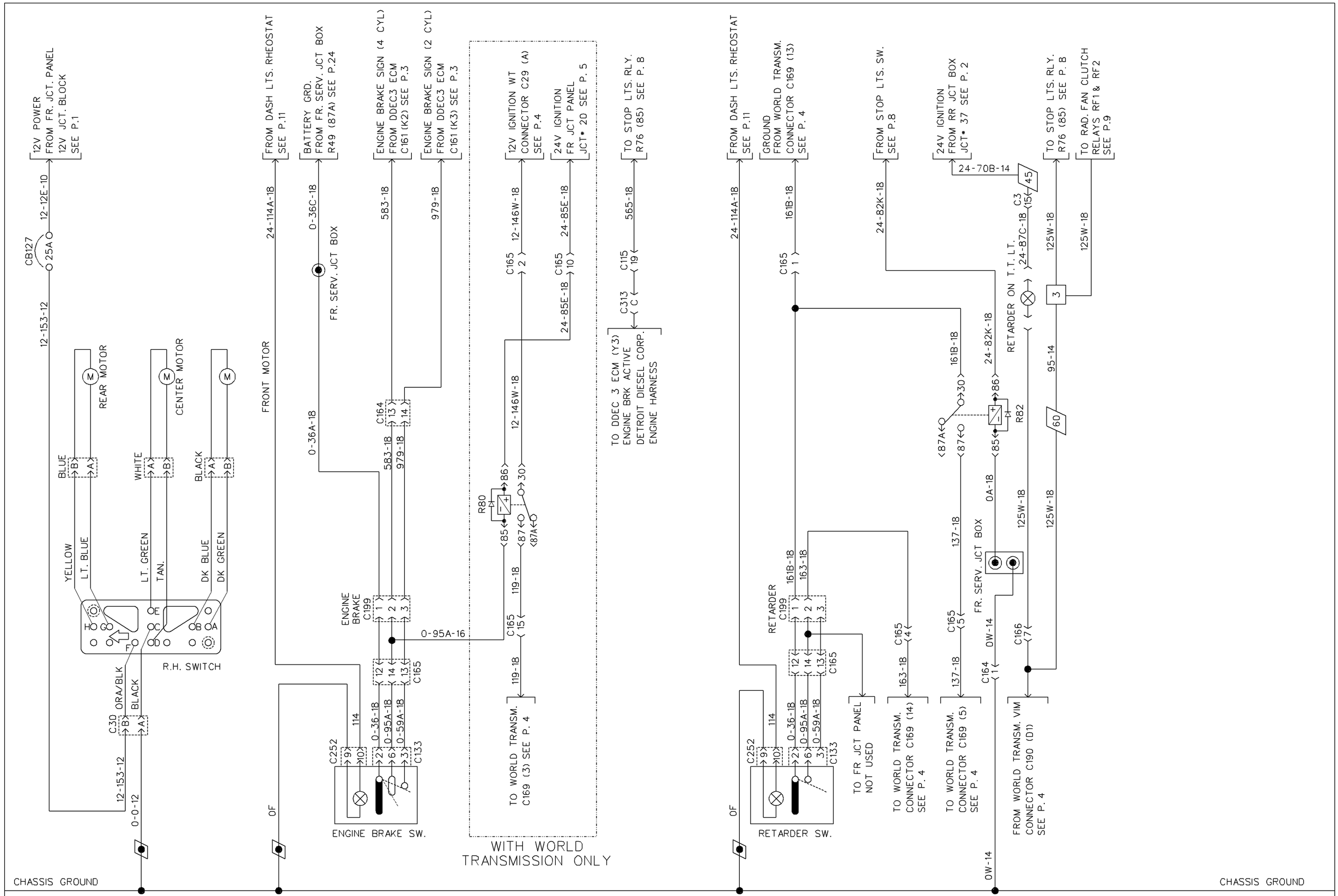

ELECTRIC DRIVER'S SEAT | ENGINE BRAKE SYSTEM | RETARDER SYSTEM
(WORLD TRANSMISSION)

PREVOST CAR inc.	WIRING DIAGRAM	NO: D060871	P. 23	REVISION 018

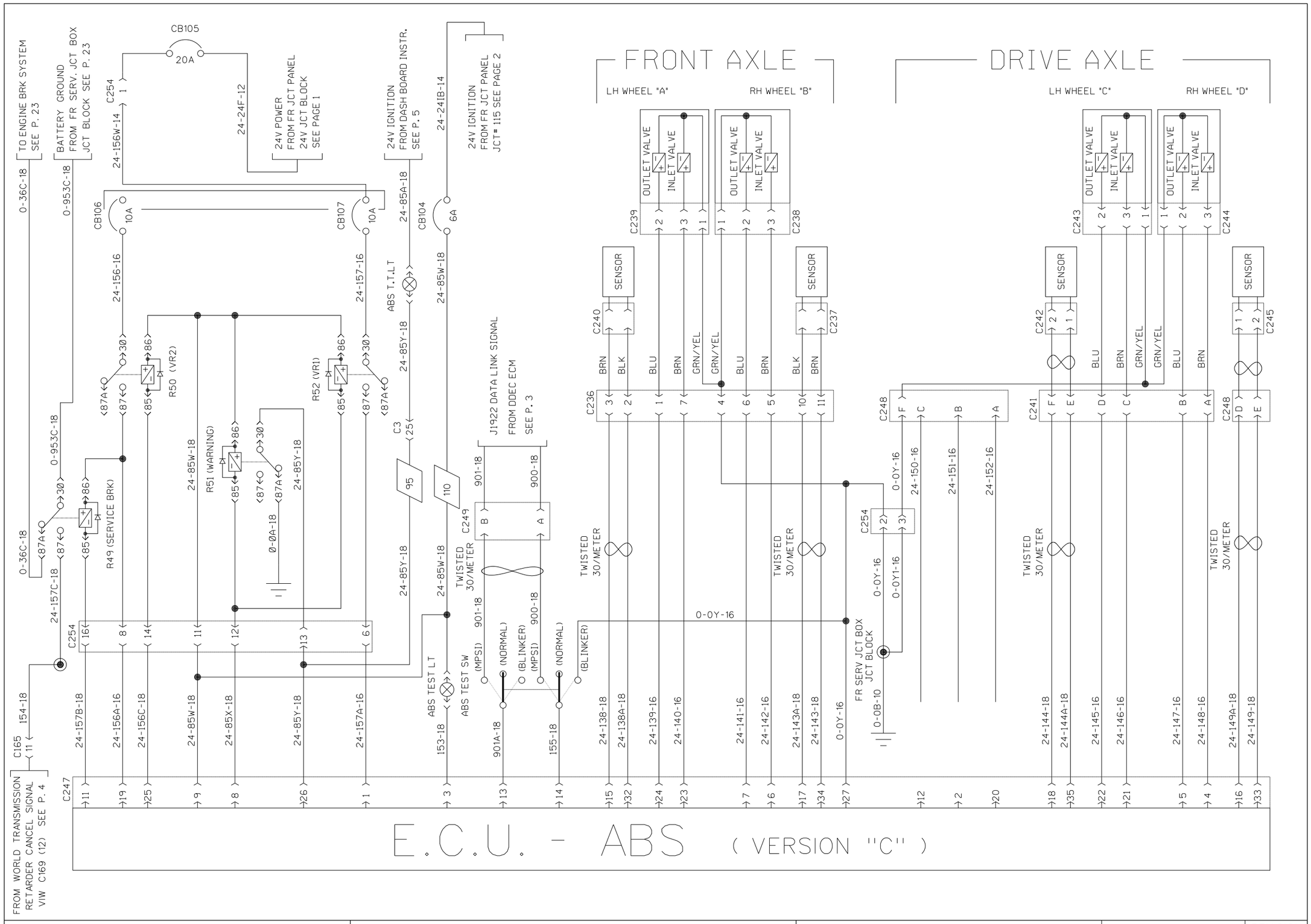

PREVOST CAR inc.	WIRING DIAGRAM	NO: D060871	P. 24	REVISION 000

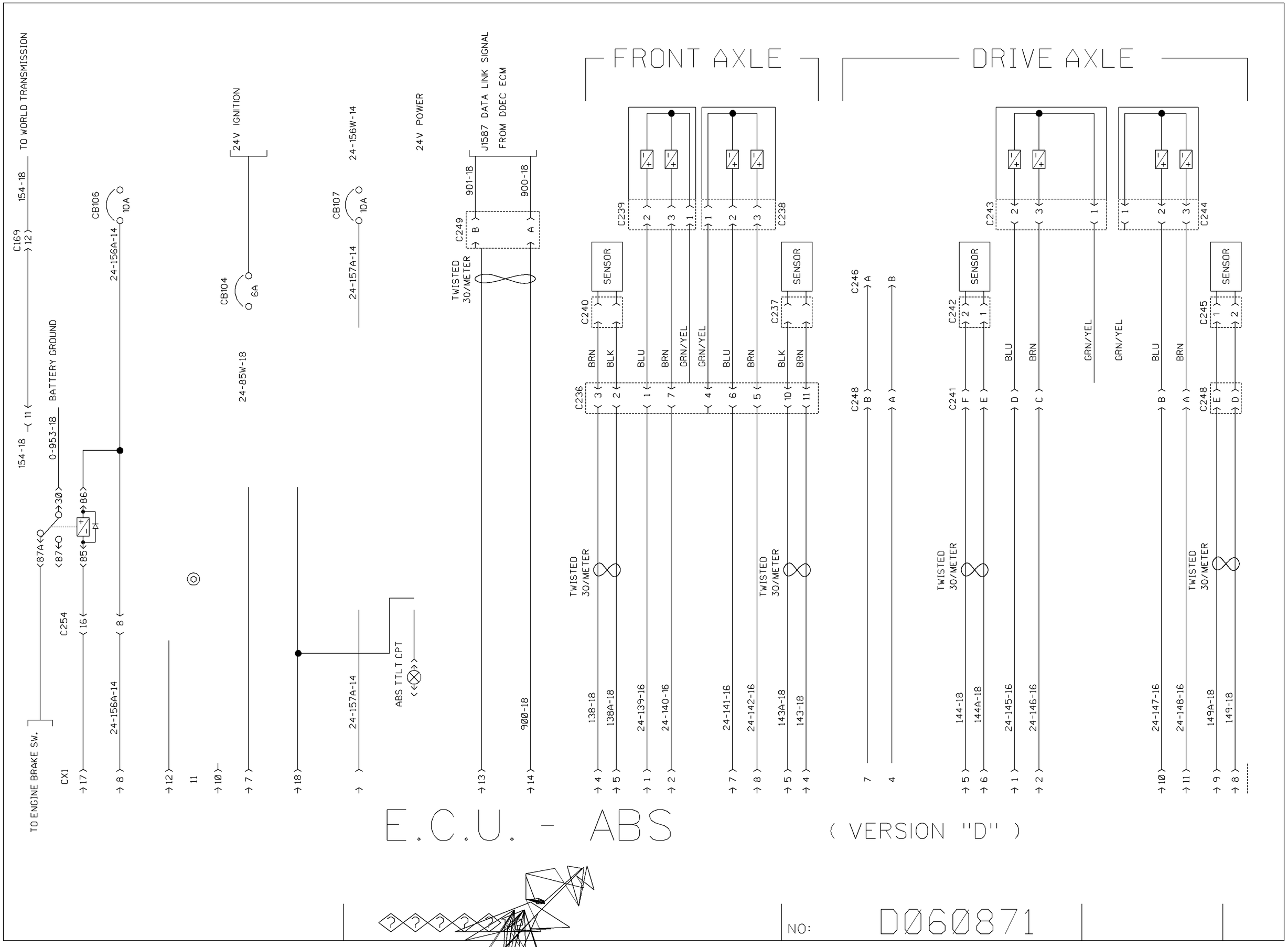
FRONT AXLE
DRIVE AXLE
TO WORLD TRANSMISSION
154-18
C169
12
11
0-953-18
BATTERY GROUND
CB106
10A
24-156A-14
24V IGNITION
CB104
6A
24-85W-18
CB107
10A
24-156W-14
24-157A-14
24V POWER
J1587 DATA LINK SIGNAL
FROM DDEC ECM
901-18
900-18
C249
B
A
TWISTED
30/METER
C239
C238
SENSOR
C240
C237
C236
BRN
BLK
BLU
GRN/YEL
C246
C248
C243
C244
C242
C241
C245
TO ENGINE BRAKE S.W.
C254
87A
87
85
30
86
16
8
CX1
17
12
10
7
18
13
14
4
5
1
2
138-18
138A-18
24-139-16
24-140-16
24-141-16
24-142-16
143A-18
143-18
144-18
144A-18
24-145-16
24-146-16
24-147-16
24-148-16
149A-18
149-18
9
ABS TTLT CPT
E.C.U. - ABS
(VERSION "D")
NO:
D060871

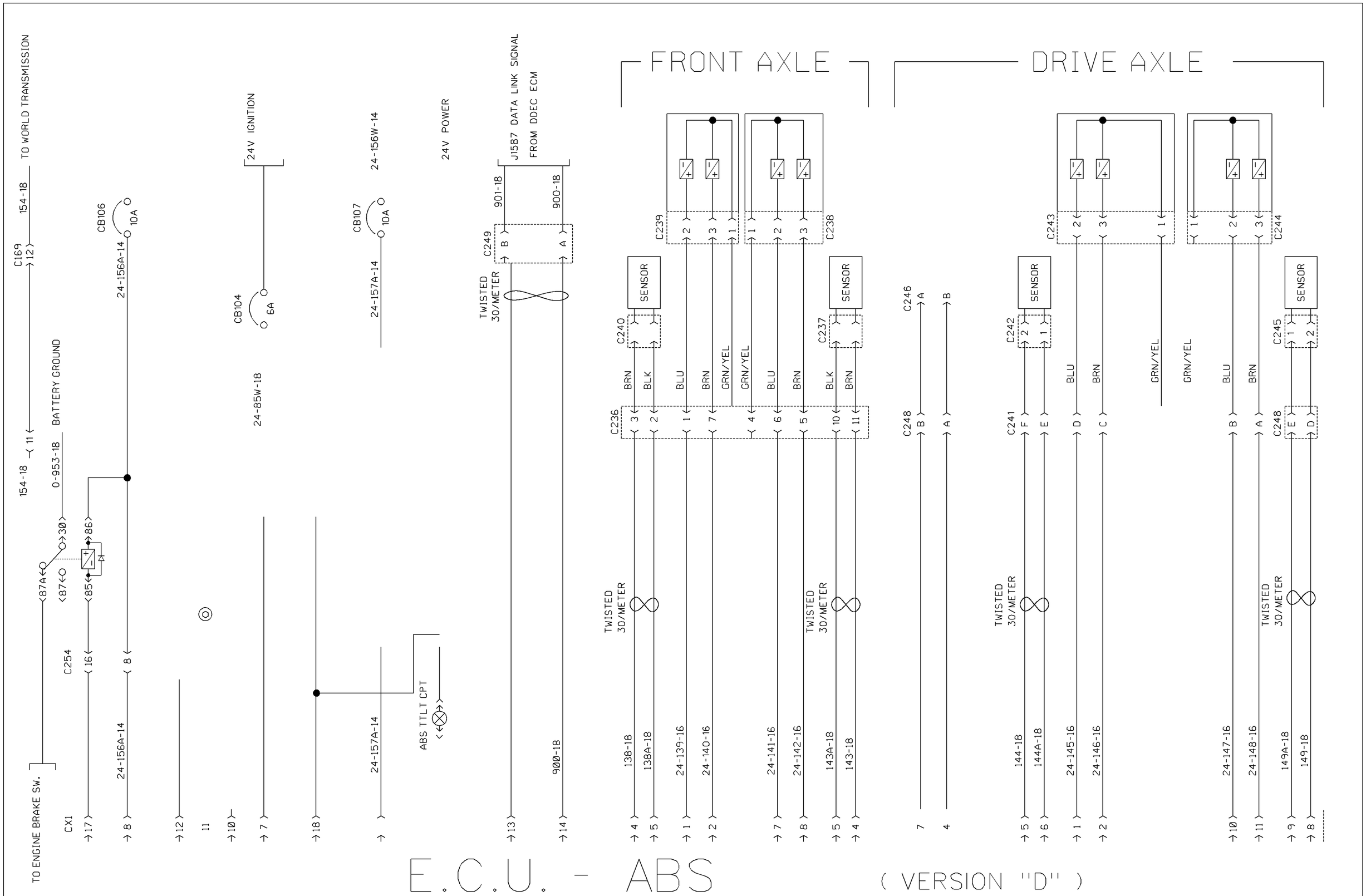

E.C.U. - ABS

(VERSION "D")

NO: D060871

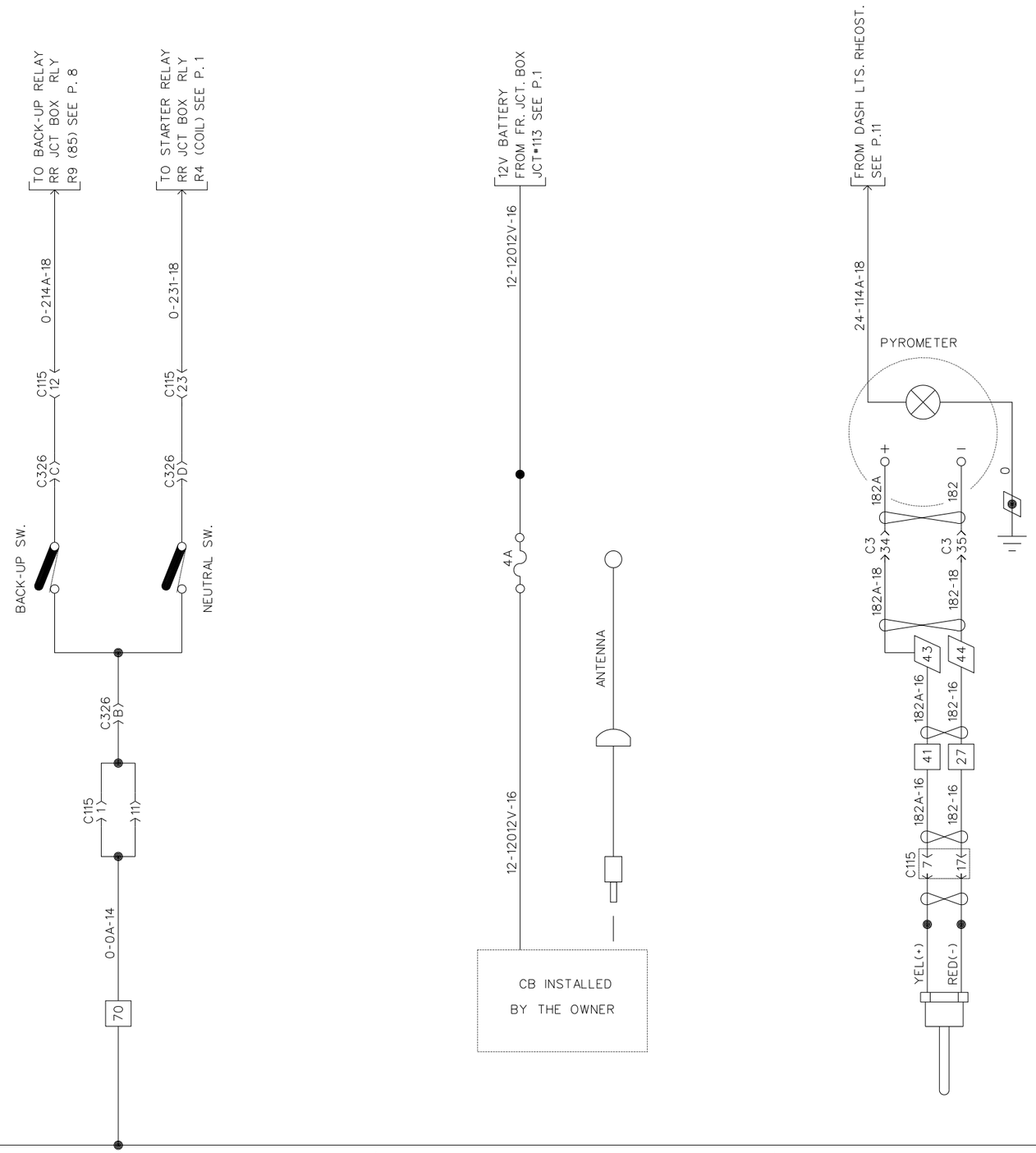

MANUAL TRANSMISSION | CB OPTION | PYROMETER

PREVOST CAR inc.	WIRING DIAGRAM	NO: D060871	P. 25	REVISION 000

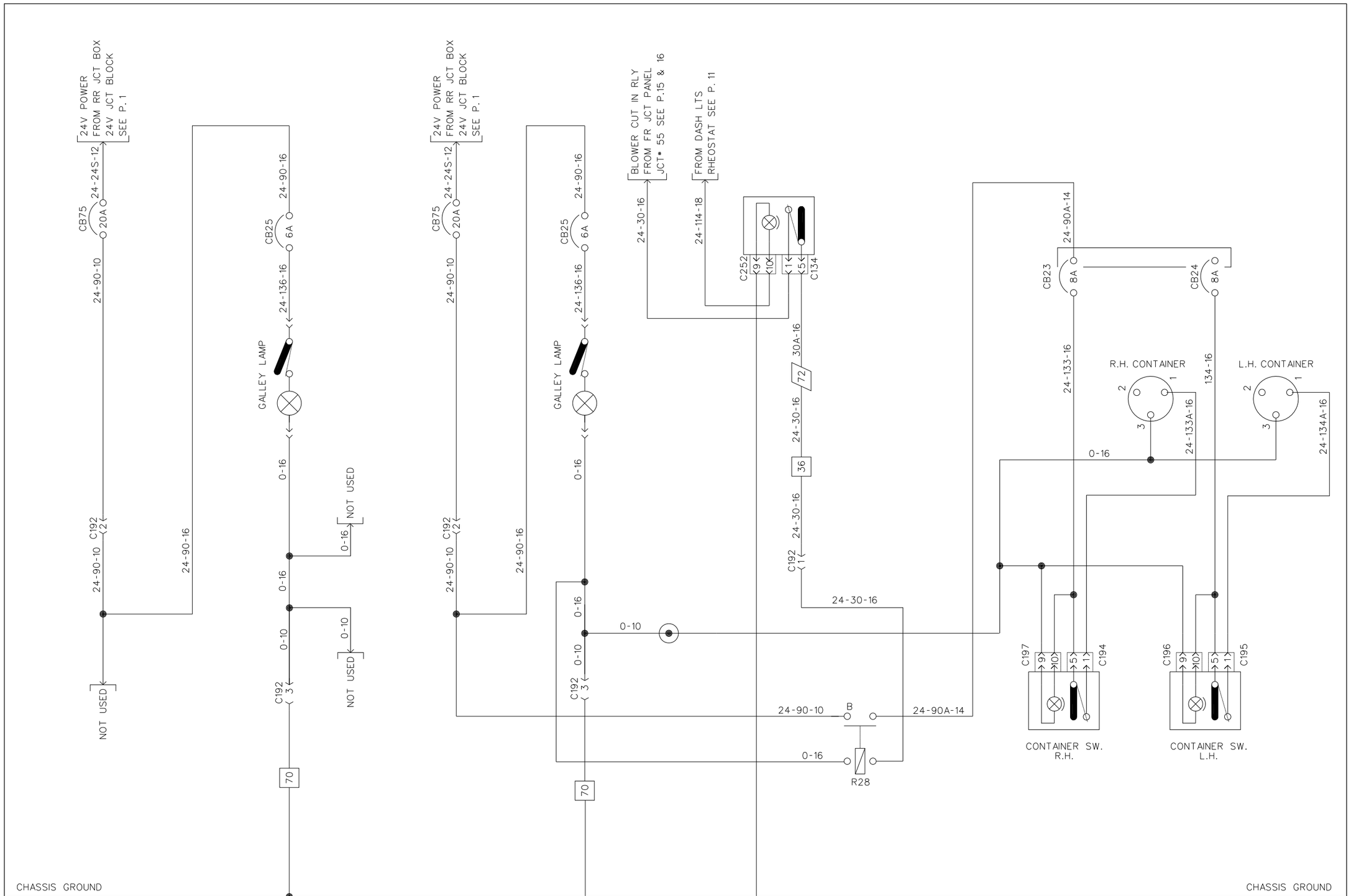

GALLEY "MINI CHEF 100"	GALLEY "MINI CHEF 200"			
PREVOST CAR inc.	WIRING DIAGRAM	NO: D060871	P. 26	REVISION 000

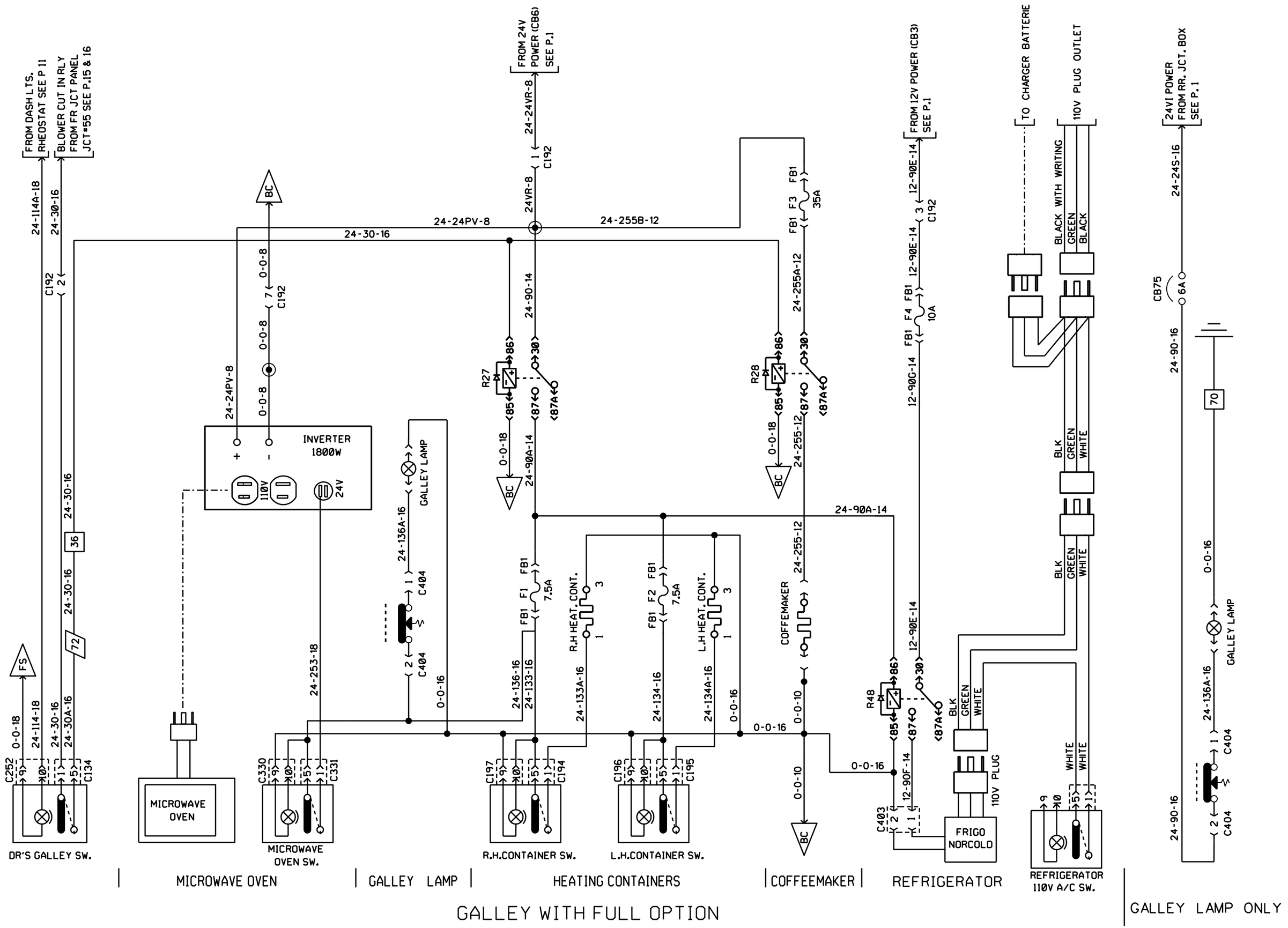

PREVOST	WIRING DIAGRAM	NO: D060871	PAGE: 26sp1	REVISION 00

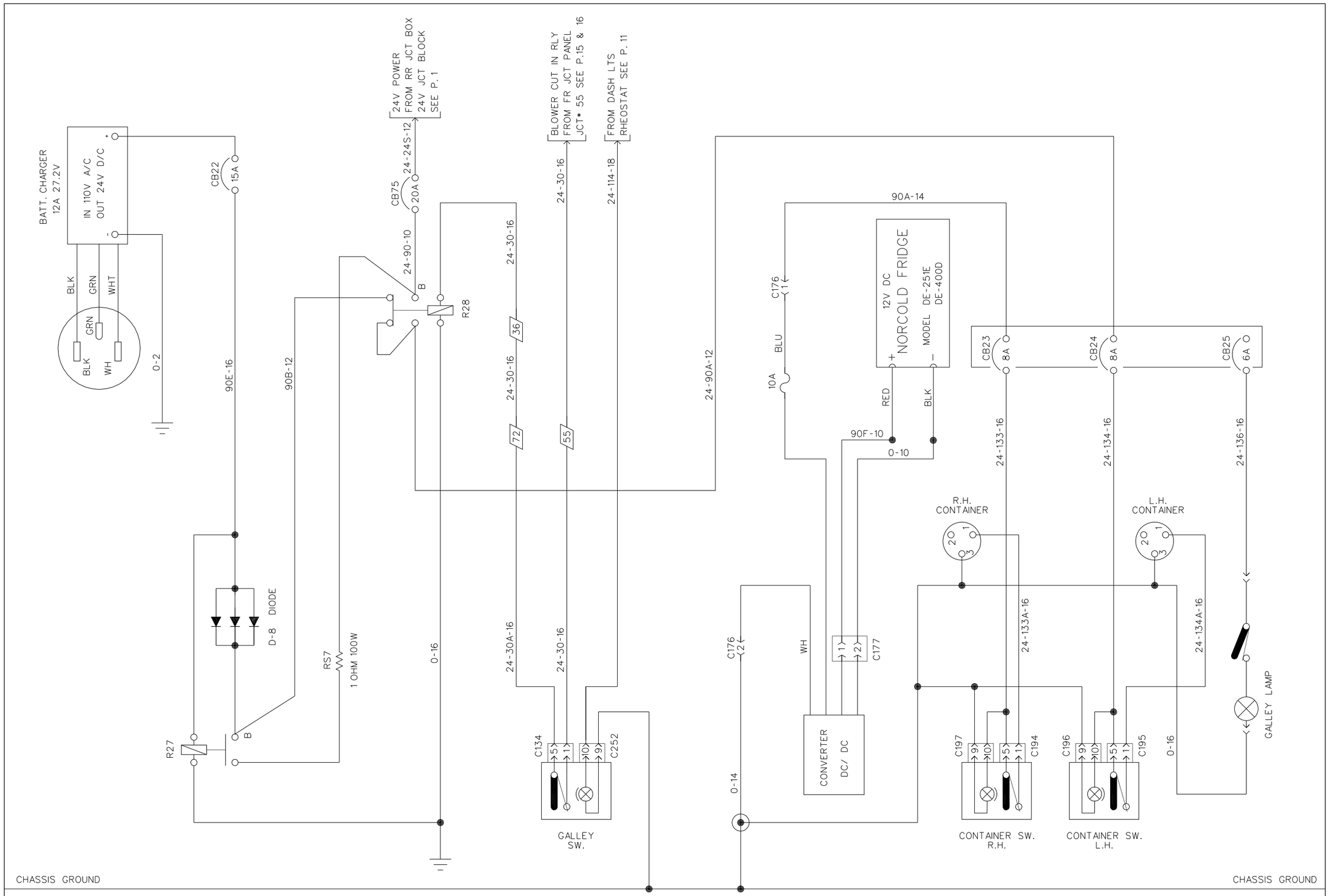

GALLEY "MINI-CHEF" NORCOLD REFRIGERATOR

PREVOST CAR inc.	WIRING DIAGRAM	NO: D060871	P. 27	REVISION 000

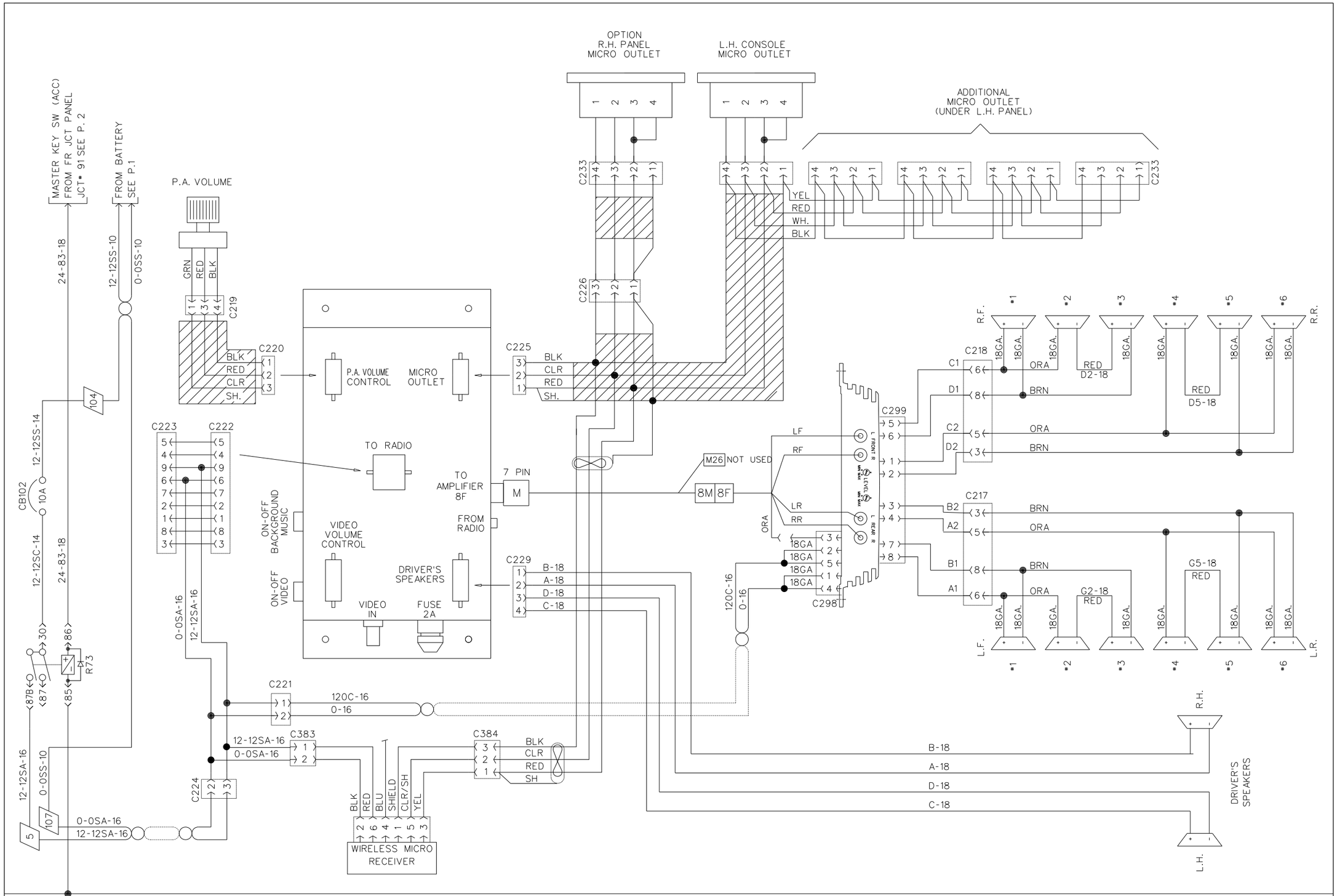

SOUND SYSTEM (P.A. ONLY)

PREVOST CAR inc.	WIRING DIAGRAM	NO: D060871	P. 28	REVISION 000

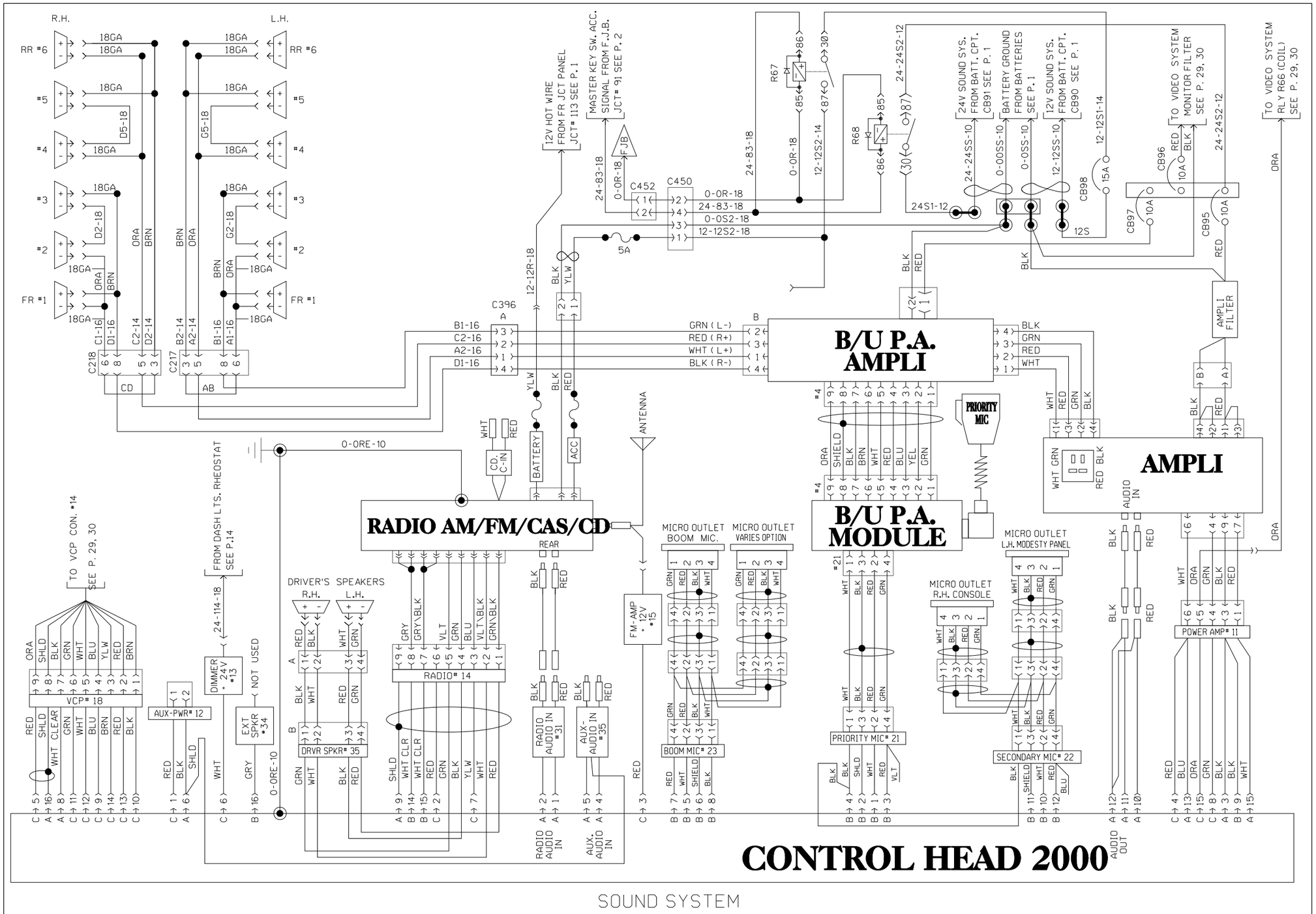

SOUND SYSTEM

PREVOST CAR inc.	WIRING DIAGRAM	NO: D060871	P. 28	REVISION 008

SOUND SYSTEM MIRBUS40

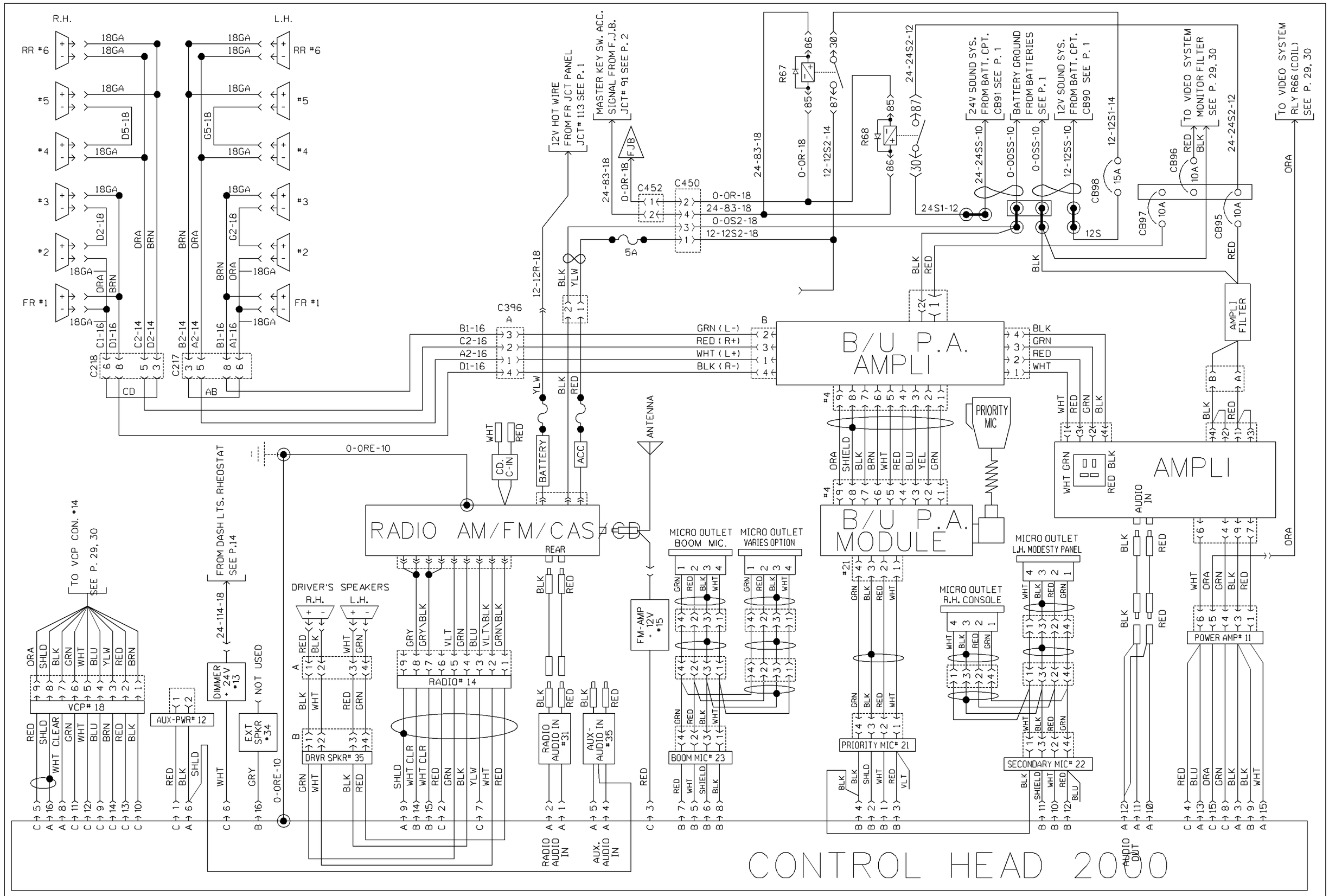

SOUND SYSTEM

PREVOST CAR inc.	WIRING DIAGRAM	NO: D060871	P. 28	REVISION 012

SOUND SYSTEM MIRBUS40

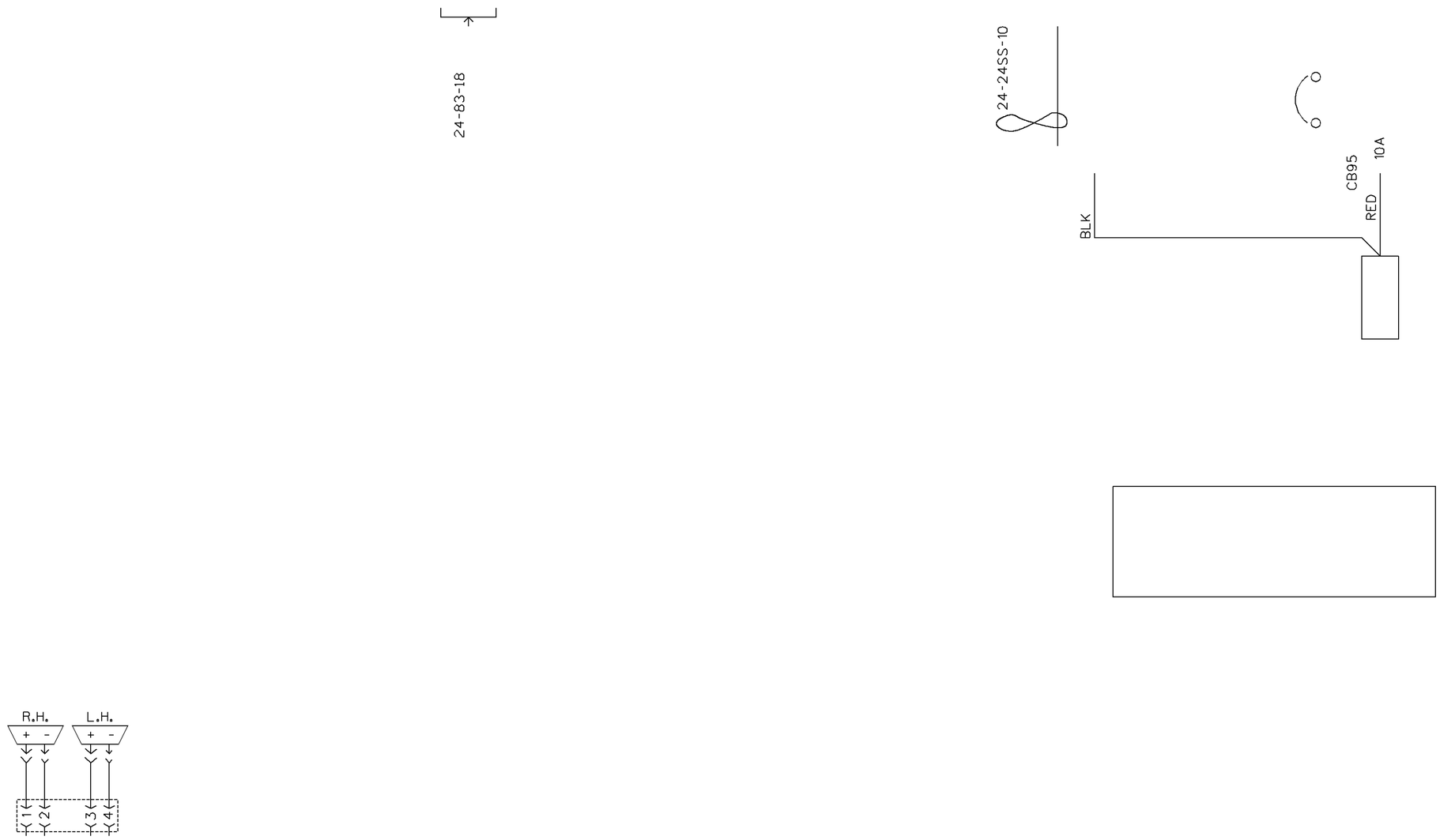
24-83-18
24-24SS-10
BLK
CB95
RED
10A
R.H.
L.H.
+
-
+
-
1
2
3
4

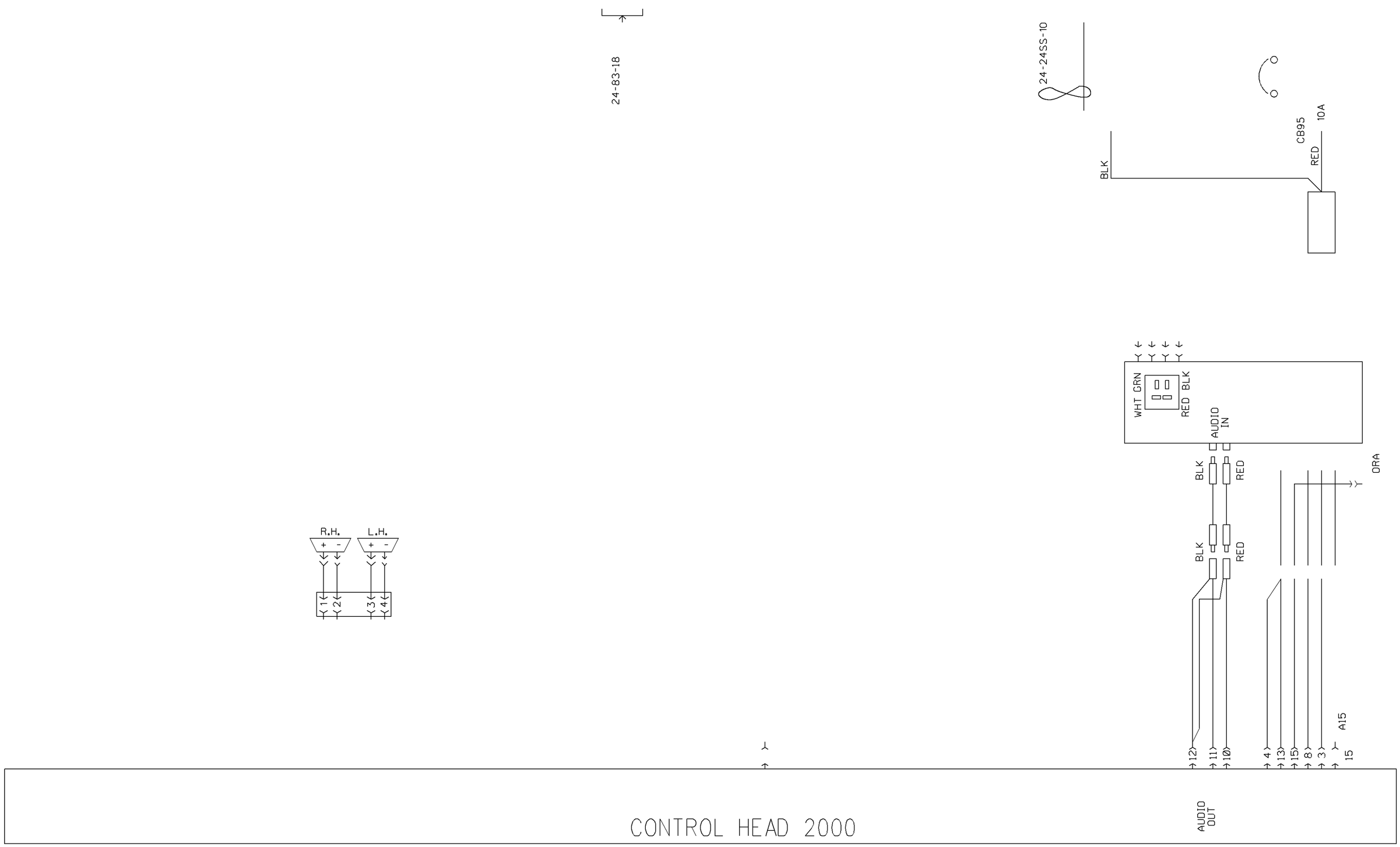

PREVOST CAR inc.	WIRING DIAGRAM	NO: D060871	P.	REVISION

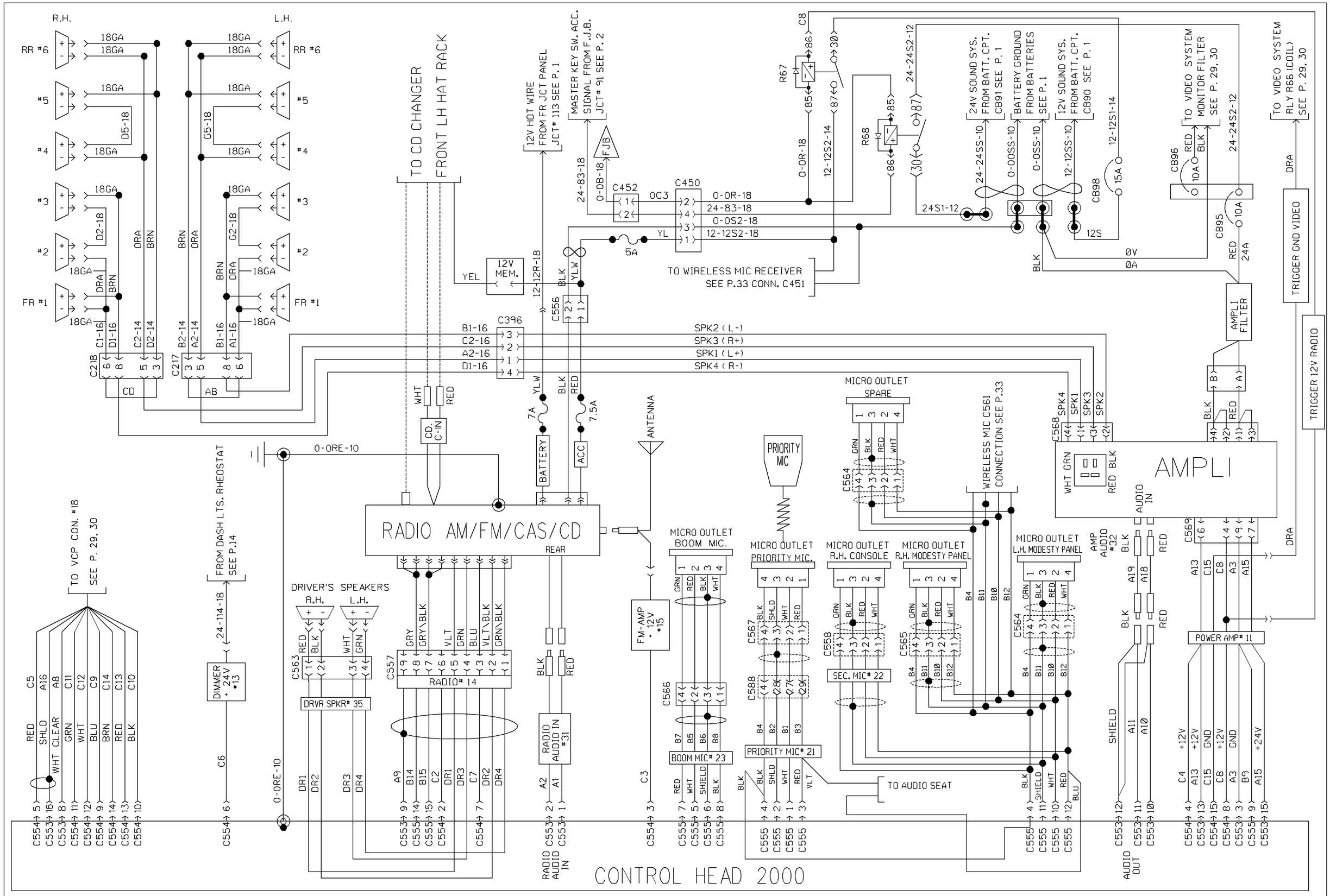

SOUND SYSTEM

PREVOST CAR inc.	WIRING DIAGRAM	NO: D060871	P. 28	REVISION 027

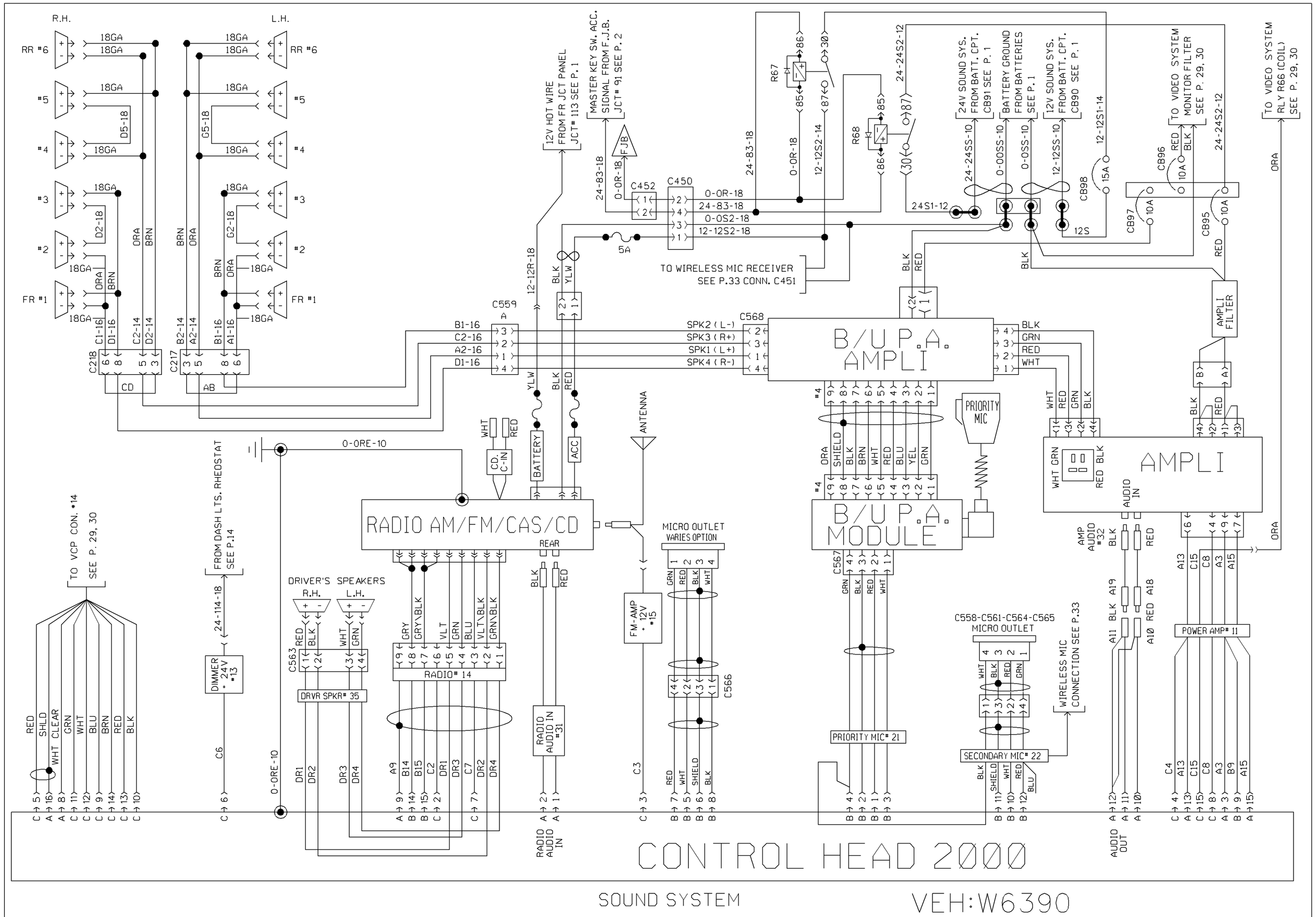

SOUND SYSTEM

VEH:W6390

PREVOST CAR inc.	WIRING DIAGRAM	NO: D060871	P. SP28	REVISION SP015

SOUND SYSTEM MIRBUS40

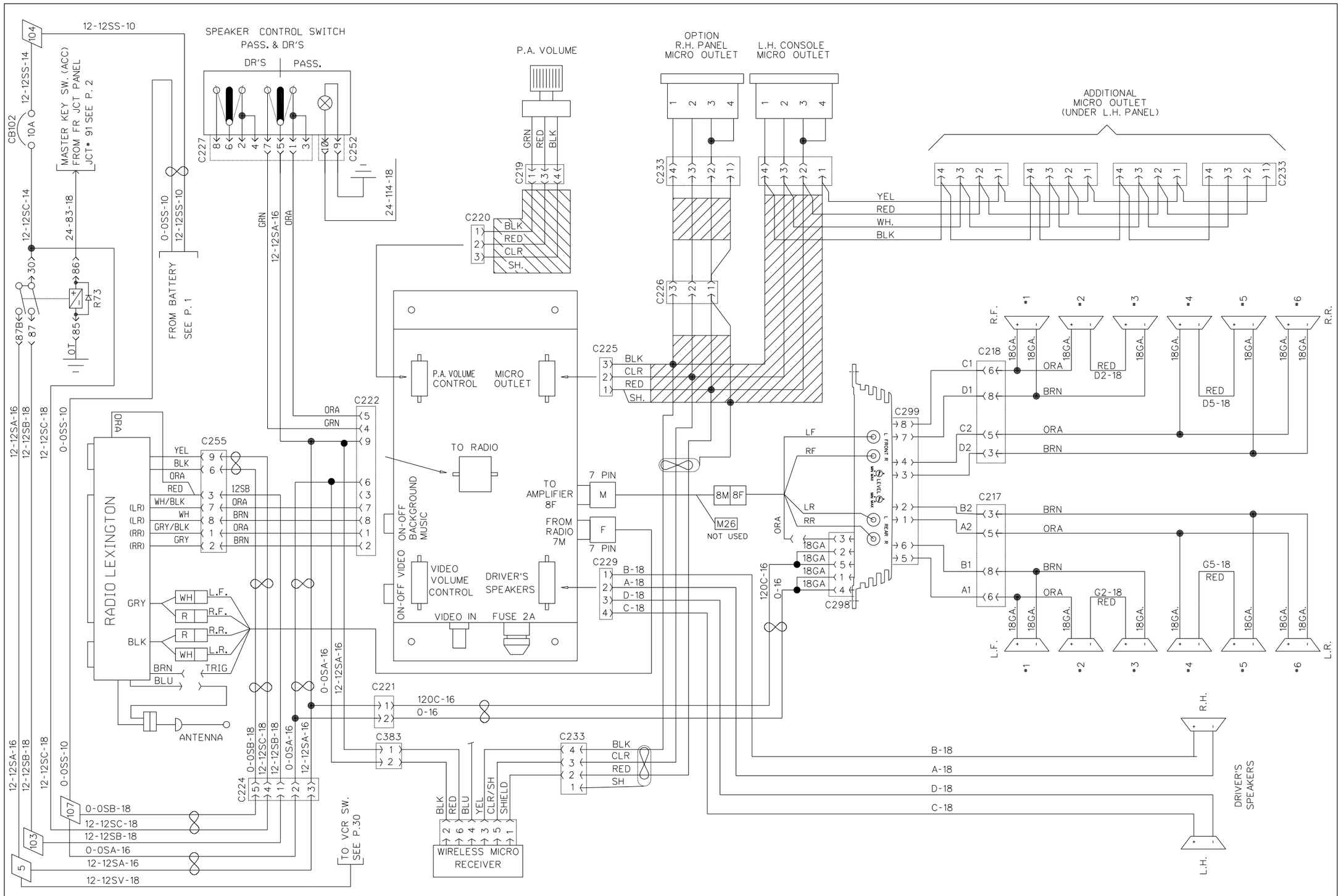

SOUND SYSTEM (RADIO & P.A.)

PREVOST CAR inc.	WIRING DIAGRAM	NO: D060871	P. 29	REVISION 000

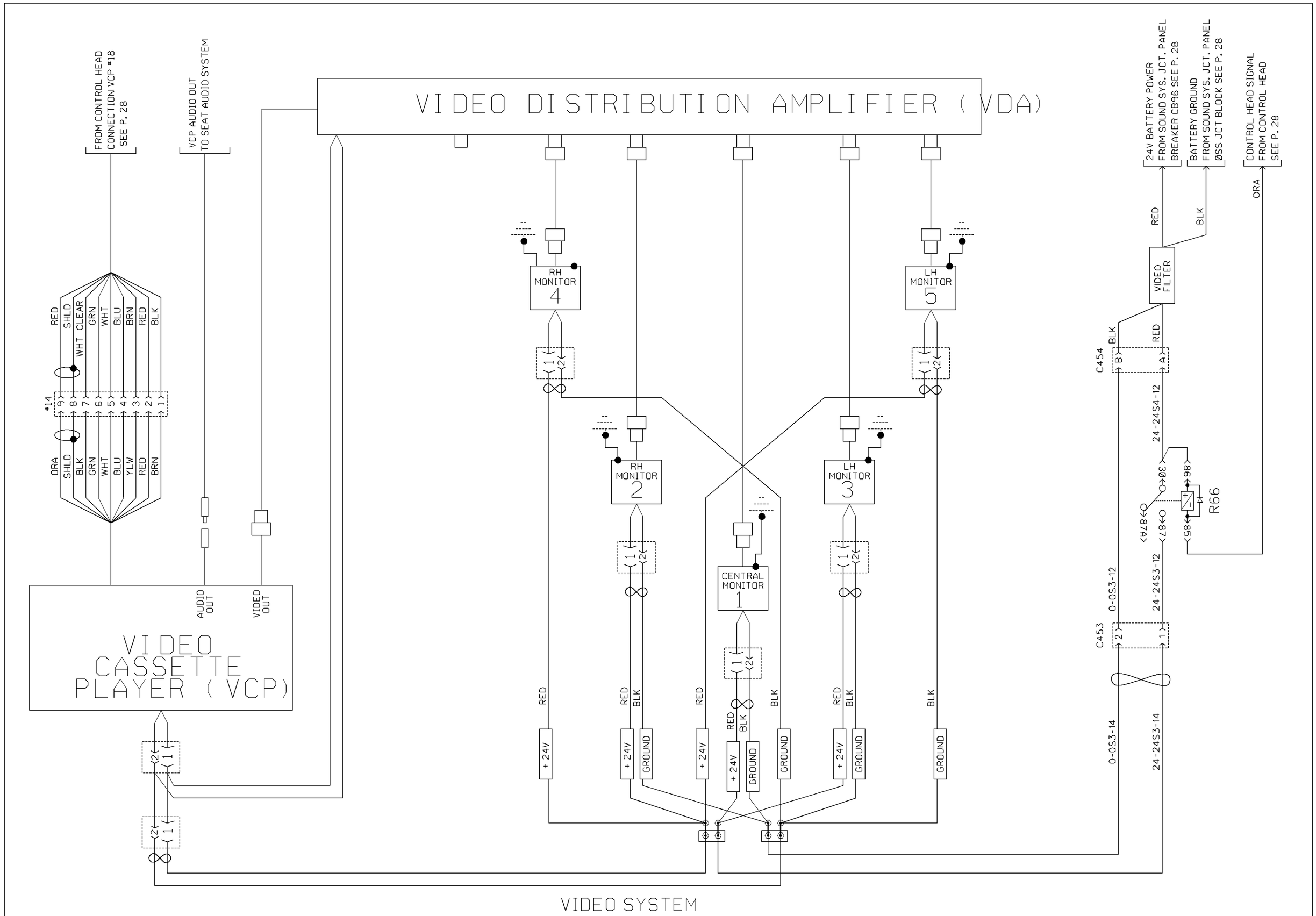

VIDEO SYSTEM

PREVOST CAR inc.	WIRING DIAGRAM	NO: D060871	P. 29	REVISION 008

VIDEO SYSTEM

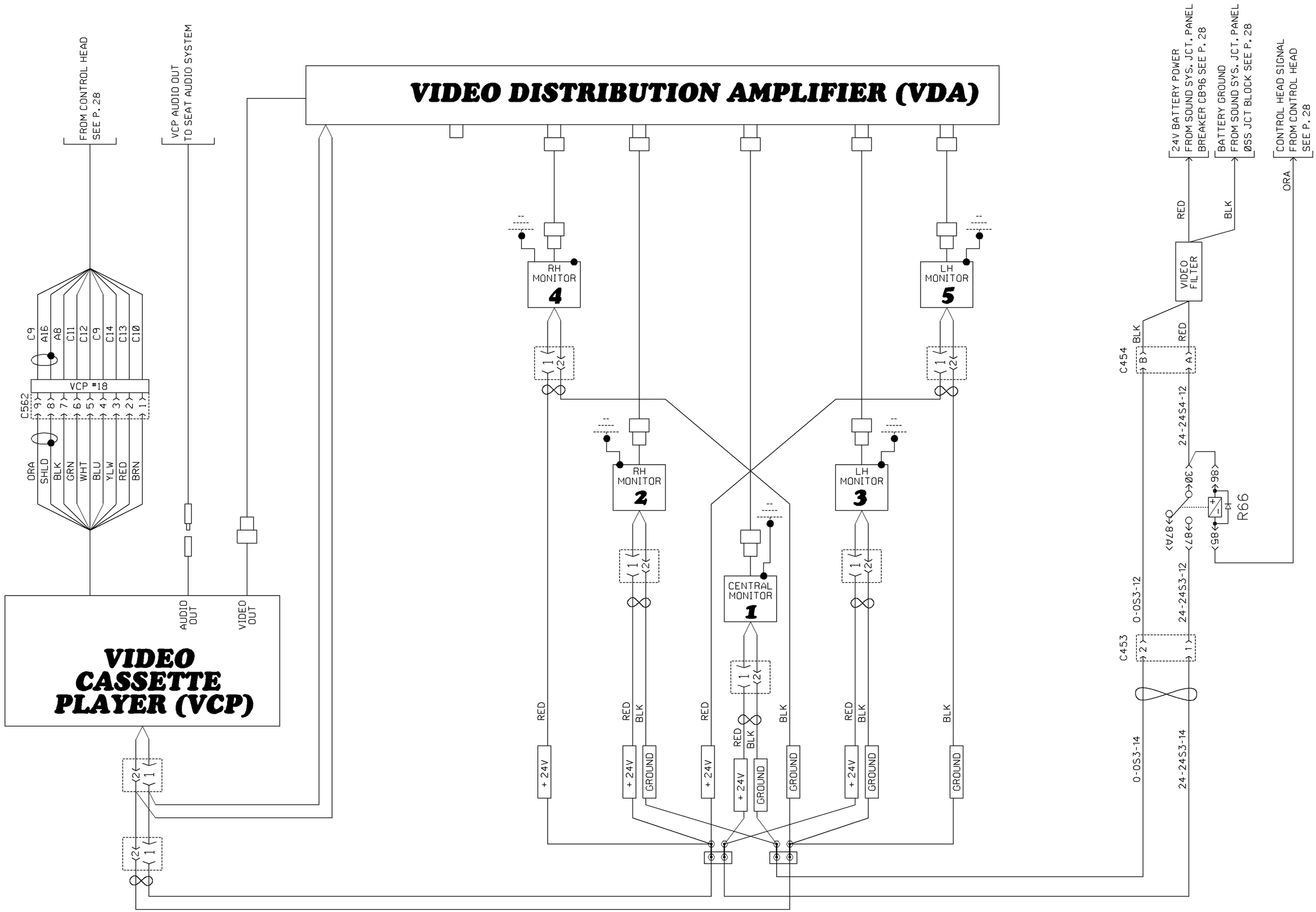

VIDEO SYSTEM

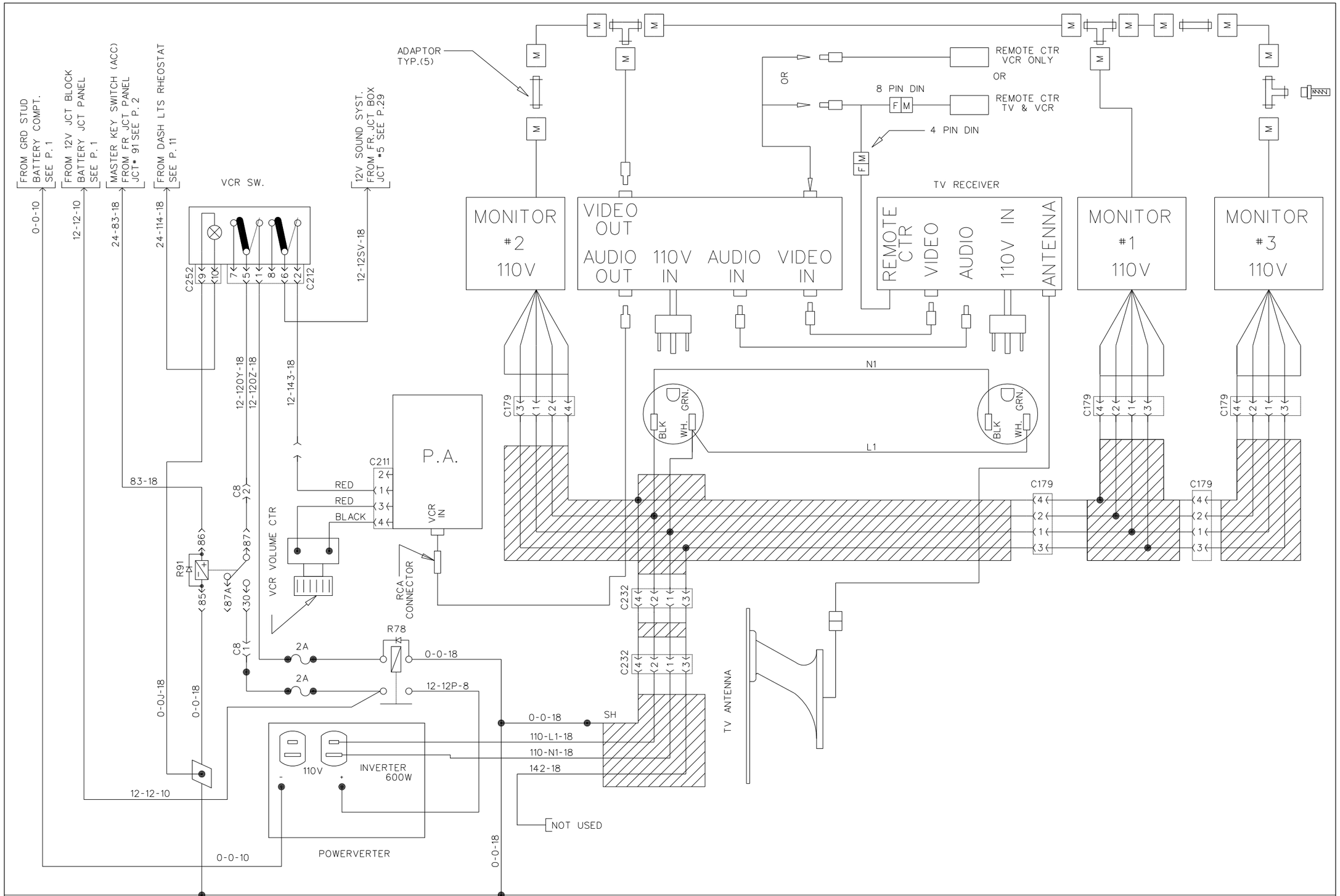

VIDEO SYSTEM & TV RECEIVER

PREVOST CAR inc.	WIRING DIAGRAM	NO: D060871	P. 30 PRIOR	REVISION 000

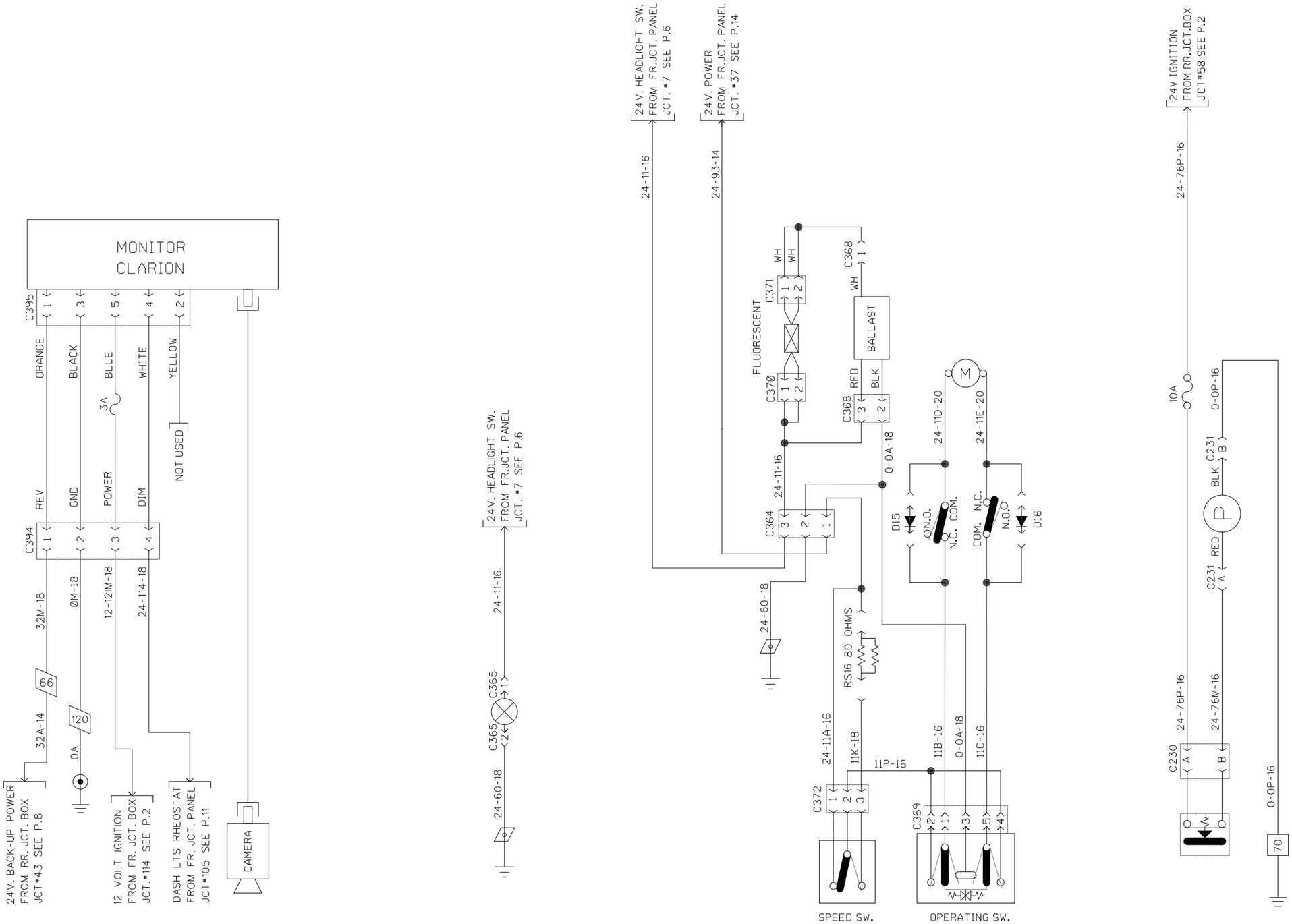

BACK-UP MONITOR (CLARION) | FRONT DESTINATION SIGN (MANUAL) | FRONT DESTINATION SIGN (ELECTRICAL) | FUEL PRIME PUMP

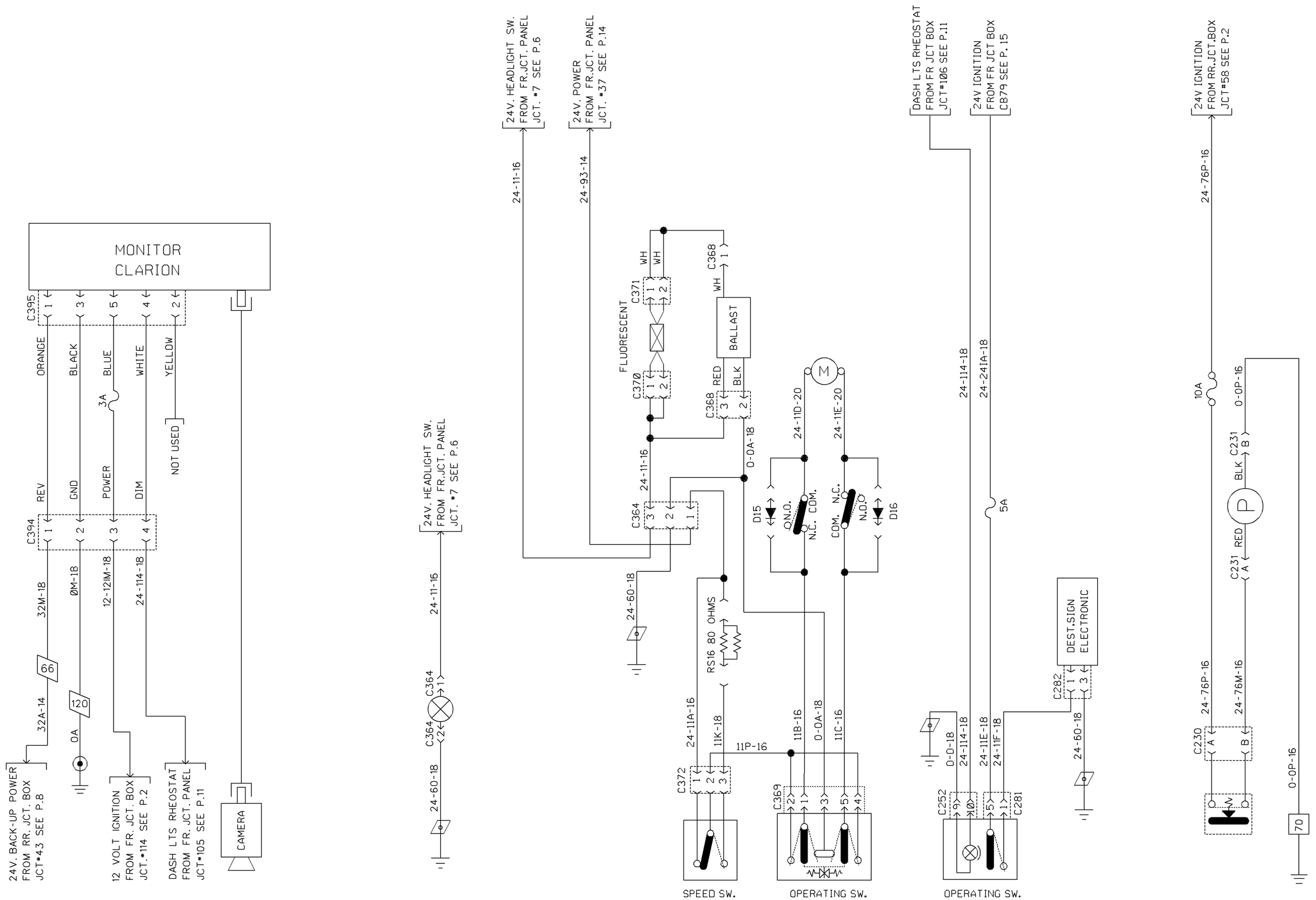

BACK-UP MONITOR (CLARION)	FRONT DEST. SIGN (MANUAL)	FRONT DESTINATION SIGN (ELECTRICAL)	FRONT DEST. SIGN (ELECTRONIC)	FUEL PRIME PUMP

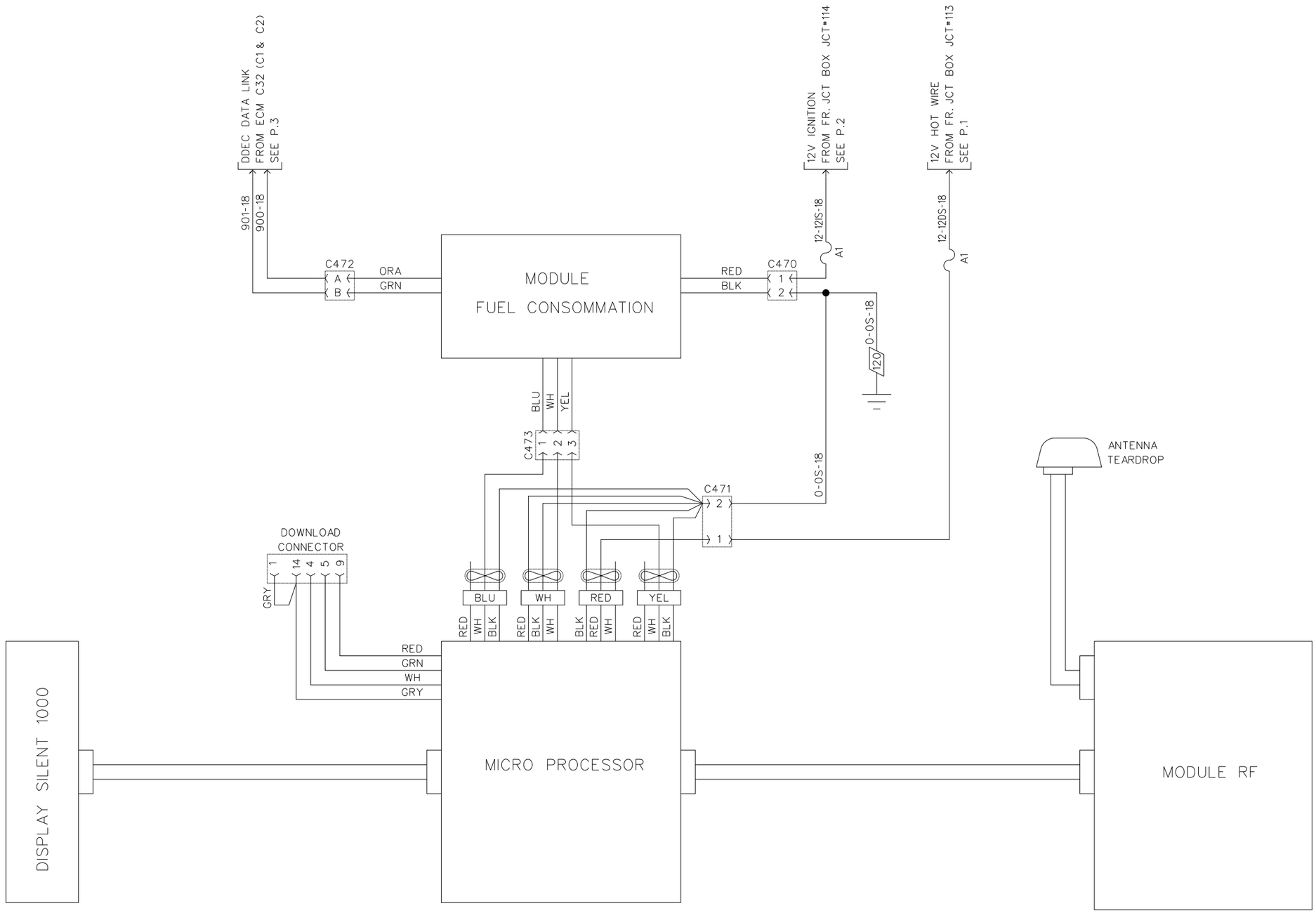

SILENT 1000

PREVOST CAR inc.	WIRING DIAGRAM	NO: D060871	P. 32SP1	REVISION 000

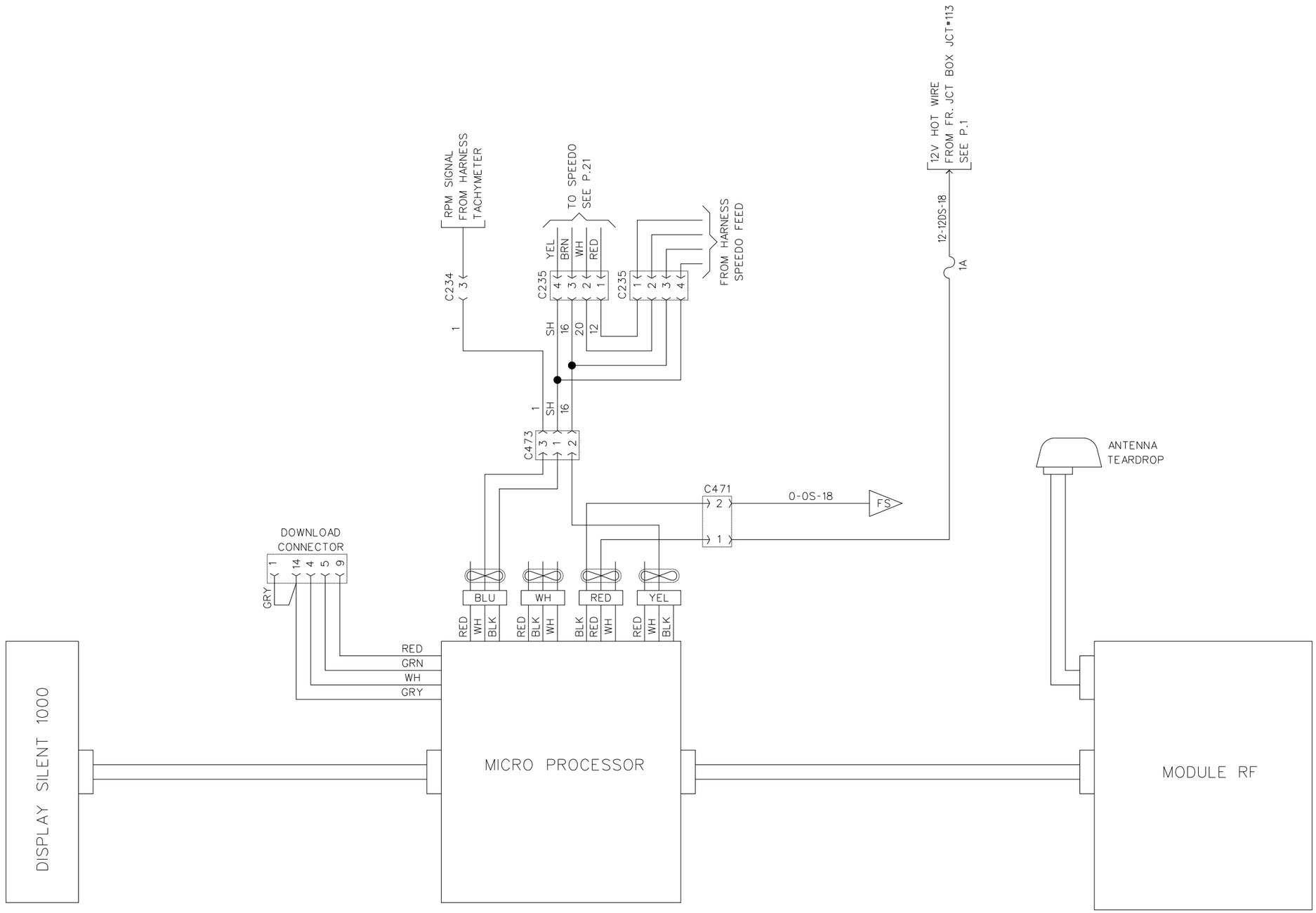

SILENT 1000 W/O FUEL CONSOMATION

PREVOST CAR inc.	WIRING DIAGRAM	NO: D060871	P. 32SP2	REVISION 000

NO: D060871

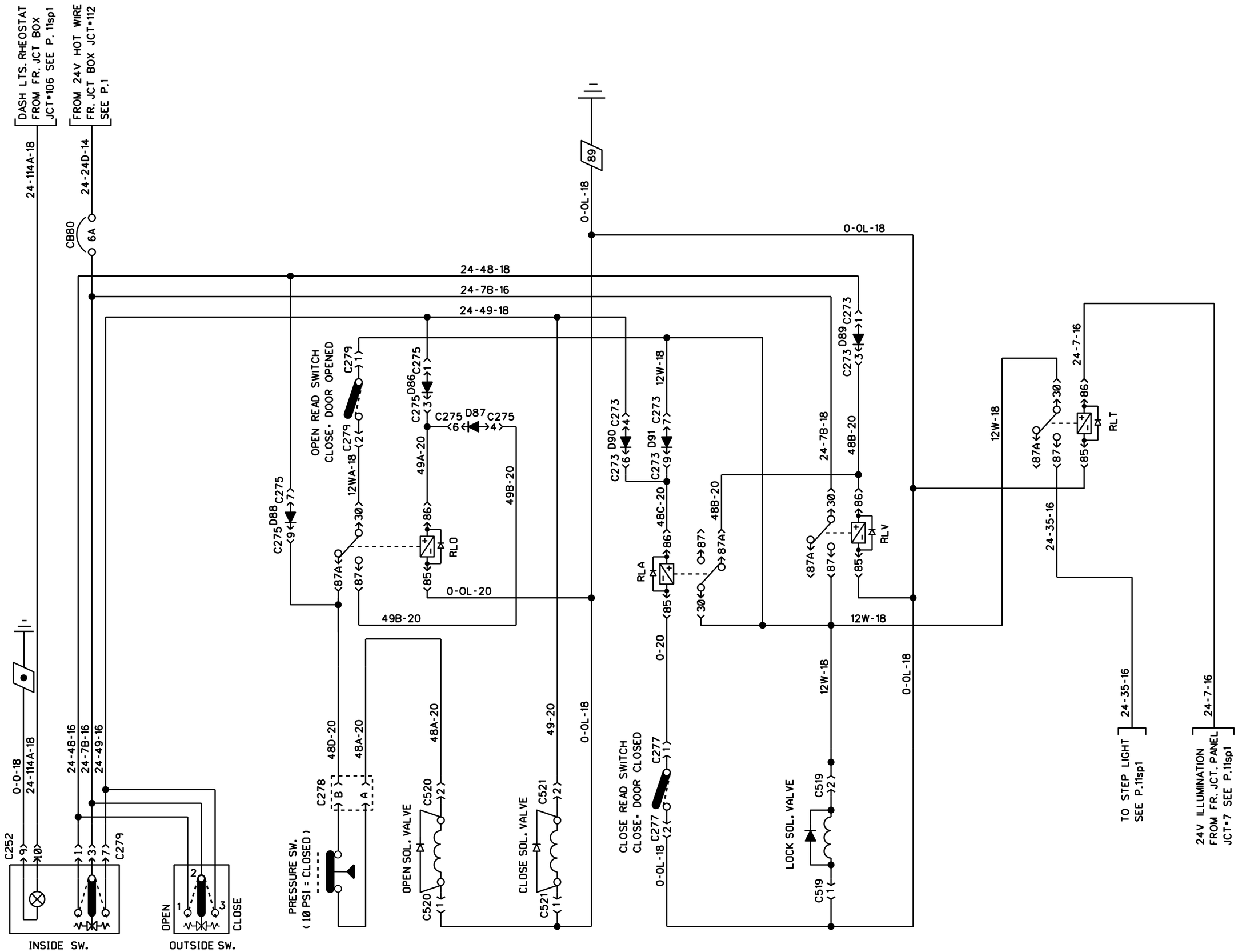

ENTRANCE DOOR (SEDAN)

PREVOST	WIRING DIAGRAM	NO: D060871	PAGE: 36 sp1	REVISION 00